SunLED
www.SunLEDusa.com

Part Number: **XZSGK94W**

5.6X1.4mm RIGHT ANGLE SMD CHIP LED LAMP

Features

- 5.6mmX1.4mm RIGHT ANGLE SMT LED, 1.0mm THICKNESS.
- LOW POWER CONSUMPTION.
- WIDE VIEWING ANGLE.
- IDEAL FOR BACKLIGHT AND INDICATOR.
- VARIOUS COLORS AND LENS TYPES AVAILABLE.
- MOISTURE SENSITIVITY LEVEL : LEVEL 4.
- PACKAGE: 2000PCS / REEL .
- RoHS COMPLIANT.

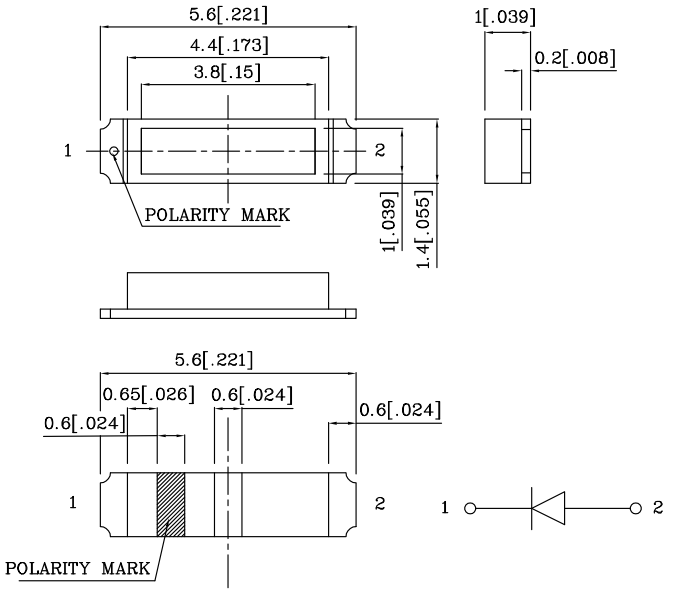

Notes:

1. All dimensions are in millimeters (inches).
2. Tolerance is ± 0.2(0.008") unless otherwise noted.
3. Specifications are subject to change without notice.

Absolute Maximum Ratings (T_A=25°C)		**SGK (InGaAlP**	**Unit**
Reverse Voltage	V_R	5	V
Forward Current	I_F	30	mA
Forward Current (Peak) 1/10 Duty Cycle 0.1ms Pulse Width	i_{FS}	150	mA
Power Dissipation	P_T	75	mW
Operating Temperature	T_A	-40 ~ +85	°C
Storage Temperature	Tstg	-40 ~ +85	

Operating Characteristics (T_A=25°C)		**SGK (InGaAlP**	**Unit**
Forward Voltage (Typ.) (I_F=20mA)	V_F	2.1	V
Forward Voltage (Max.) (I_F=20mA)	V_F	2.5	V
Reverse Current (Max.) (V_R=5V)	I_R	10	uA
Wavelength Of Peak Emission (Typ.) (I_F=20mA)	λ P	574	nm
Wavelength Of Dominant Emission (Typ.) (I_F=20mA)	λ D	570	nm
Spectral Line Full Width At Half-Maximum (Typ.) (I_F=20mA)	Δλ	20	nm
Capacitance (V_F=0V, f=1MHz)	C	15	pF

Part Number	Emitting Color	Emitting Material	Lens-color	Luminous Intensity (IF=20mA) mcd		Wavelength nm λ P	Viewing Angle 2 θ 1/2
				min.	typ.		
XZSGK94W	Green	InGaAlP	Water Clear	36	79	574	90°

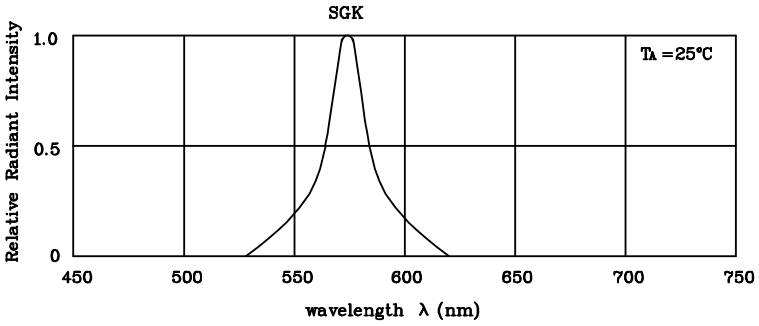

RELATIVE INTENSITY Vs. WAVELENGTH

❖ SGK

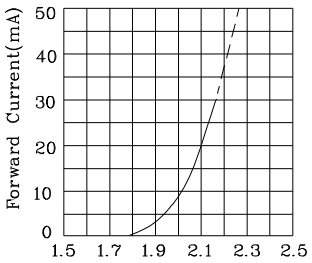

FORWARD CURRENT Vs.
FORWARD VOLTAGE

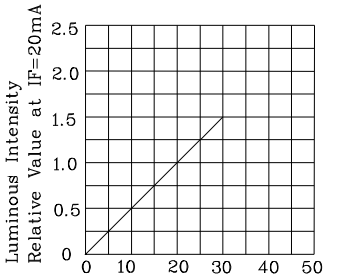

LUMINOUS INTENSITY Vs.
FORWARD CURRENT

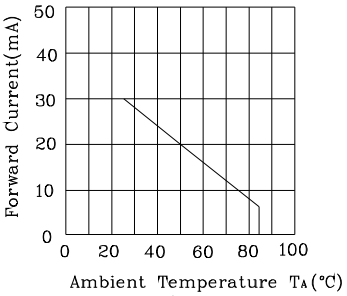

FORWARD CURRENT
DERATING CURVE

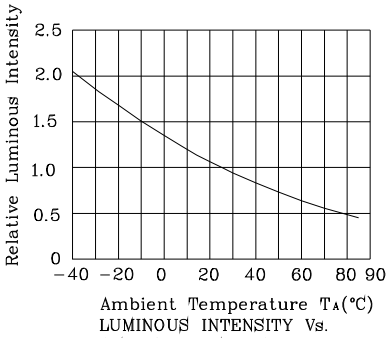

LUMINOUS INTENSITY Vs.
AMBIENT TEMPERATURE

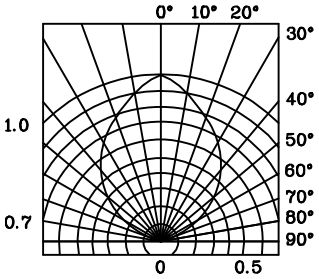

SPATIAL DISTRIBUTION

Reflow Soldering Profile For Lead-free SMT Process.

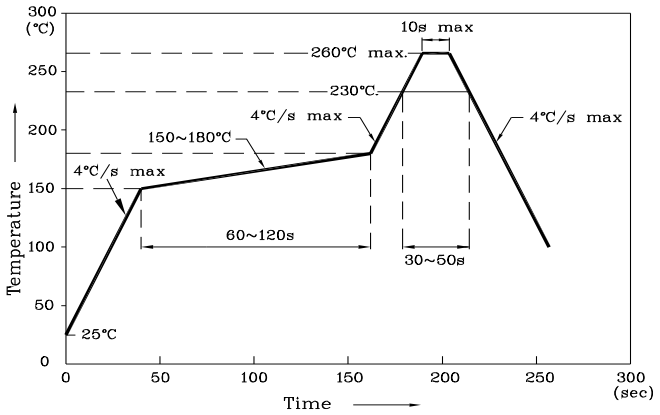

Notes:
1. Maximum soldering temperature should not exceed 260℃.
2. Recommended reflow temperature: 145℃-260℃.
3. Do not put stress to the epoxy resin during high temperatures conditions.

❖ Recommended Soldering Pattern (Units: mm ; Tolerance: ± 0.1)

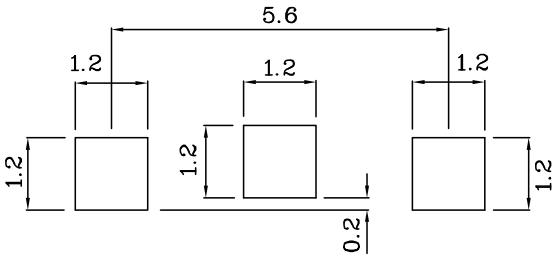

❖ The device has a single mounting surface. The device must be mounted according to the specifications.

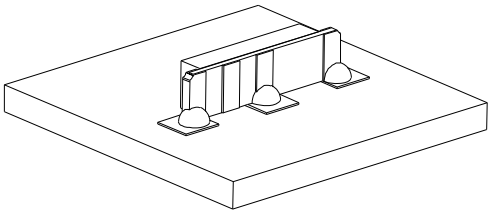

❖ Tape Specification (Units : mm)

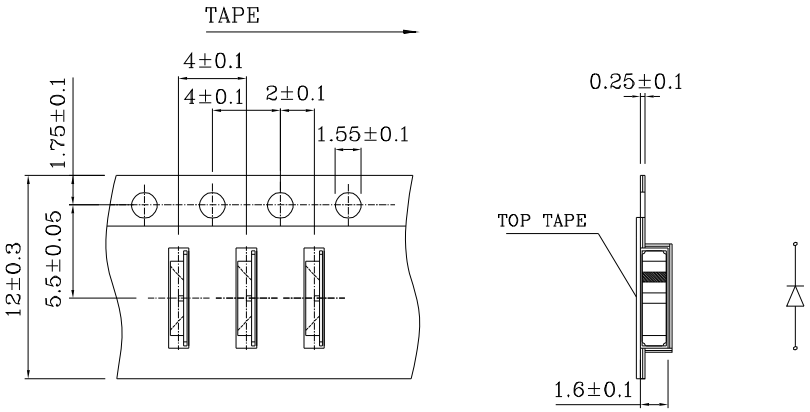

Remarks:
If special sorting is required (e.g. binning based on forward voltage, Luminous intensity/ luminous flux, or wavelength), the typical accuracy of the sorting process is as follows:
1. Wavelength: +/-1nm
2. Luminous intensity/ luminous flux: +/-15%
3. Forward Voltage: +/-0.1V
Note: Accuracy may depend on the sorting parameters.
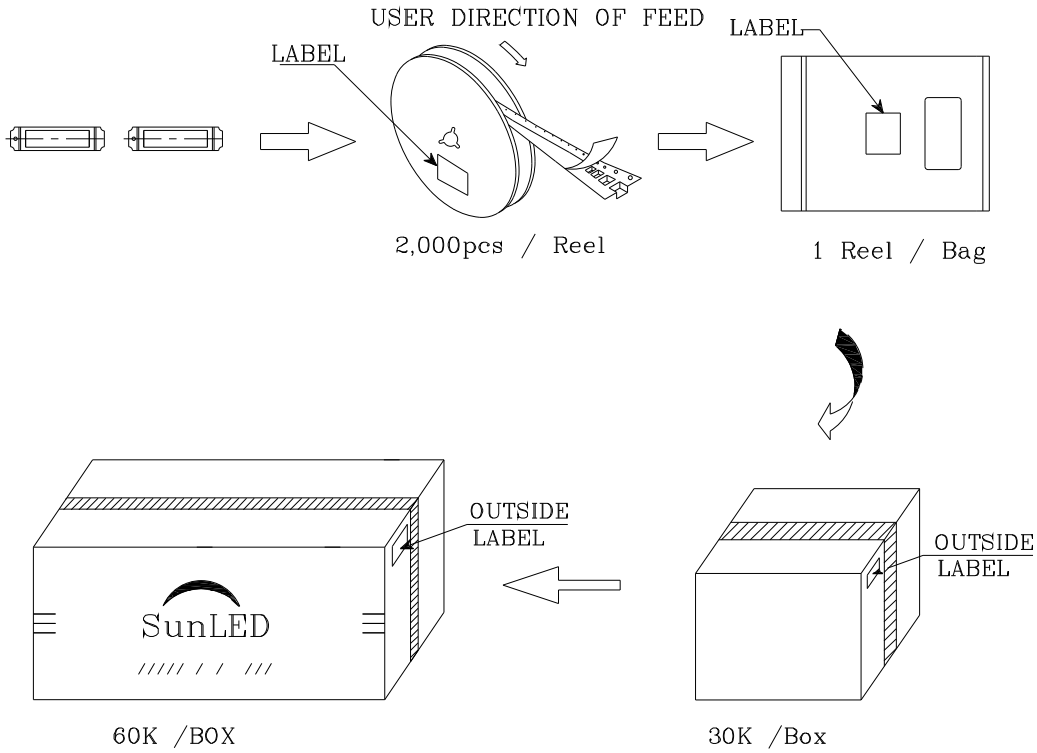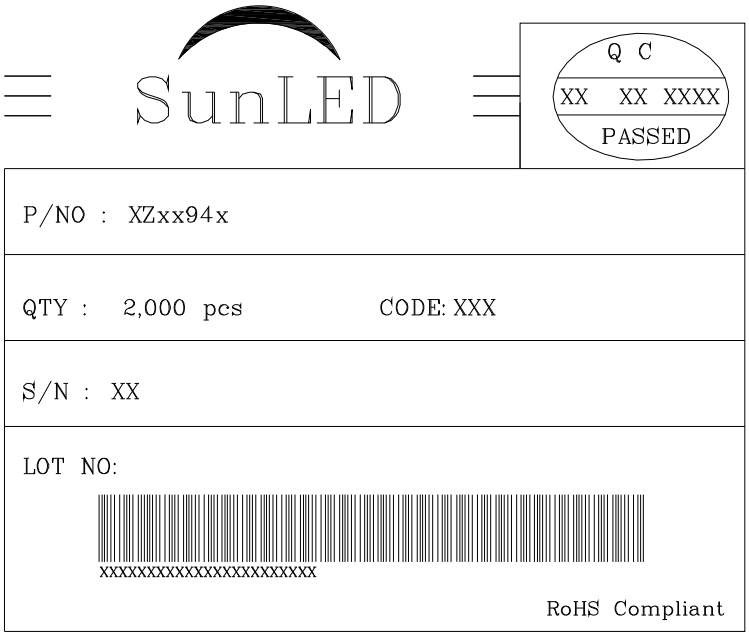
PACKING & LABEL SPECIFICATIONS XZSGK94W