SunLED
www.SunLEDusa.com

Part Number: XZMO56W-1

3. 0mmx1.0 mm RIGHT ANGLE SMD CHIP LED LAMP

PRELIMINARY SPEC

Features

- 3.0mm x 1.0mm RIGHT ANGLE SMT LED, 2.5mm THICKNESS.
- LOW POWER CONSUMPTION.
- WIDE VIEWING ANGLE.
- IDEAL FOR BACK LIGHT AND INDICATOR.
- VARIOUS COLORS AND LENS TYPES AVAILABLE.
- PACKAGE : 2000PCS / REEL.
- MOISTURE SENSITIVITY LEVEL : LEVEL 3.
- RoHS COMPLIANT.

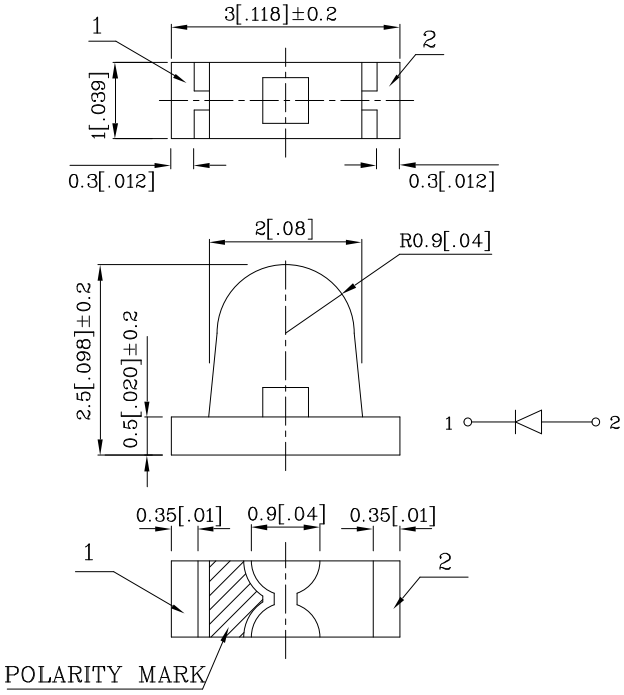

Notes:

1. All dimensions are in millimeters (inches).
2. Tolerance is ± 0.15(0.006") unless otherwise noted.
3. Specifications are subject to change without notice.

Absolute maximum ratings (T_A=25°C)		MO (InGaAlP)	Unit
Reverse Voltage	V_R	5	V
Forward Current	I_F	30	mA
Forward Current (Peak) 1/10 Duty Cycle 0.1ms Pulse Width	i_{FS}	195	mA
Power Dissipation	P_T	75	mW
Operating Temperature	T_A	-40 ~ +85	°C
Storage Temperature	Tstg	-40 ~ +85	

Operating Characteristics (T_A=25°C)		MO (InGaAlP)	Unit
Forward Voltage (Typ.) (I_F=20mA)	V_F	2.0	V
Forward Voltage (Max.) (I_F=20mA)	V_F	2.5	V
Reverse Current (Max.) (V_R=5V)	I_R	10	uA
Wavelength of Peak Emission (Typ.) (I_F=20mA)	λ P	610	nm
Wavelength of Dominant Emission (Typ.) (I_F=20mA)	λ D	601	nm
Spectral Line Full Width At Half-Maximum (Typ.) (I_F=20mA)	Δλ	29	nm
Capacitance (Typ.) (V_F=0V, f=1MHz)	C	30	pF

Part Number	Emitting Color	Emitting Material	Lens-color	Luminous Intensity (IF=20mA) mcd		Wavelength nm λ P	Viewing Angle 2 θ 1/2
				min.	typ.		
XZMO56W-1	Orange	InGaAlP	Water Clear	70	297	610	30°

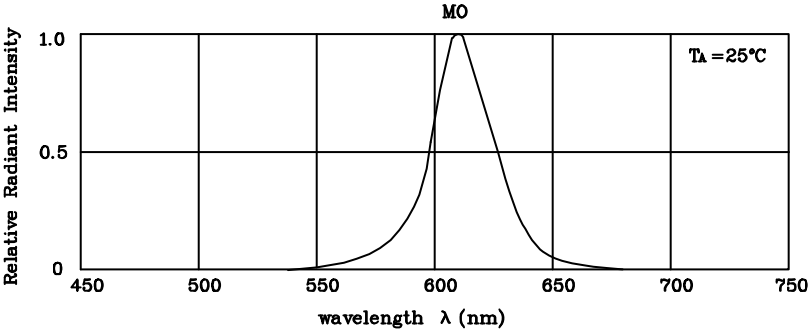

RELATIVE INTENSITY Vs. WAVELENGTH

❖ MO

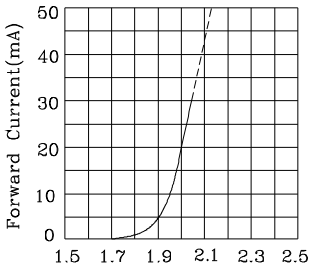

FORWARD CURRENT Vs.
FORWARD VOLTAGE

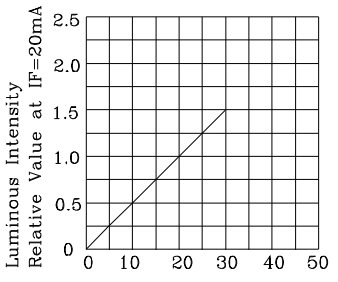

LUMINOUS INTENSITY Vs.
FORWARD CURRENT

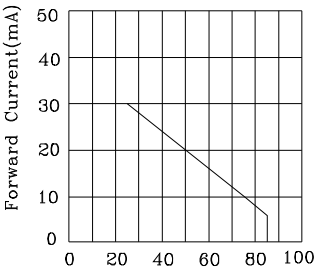

FORWARD CURRENT
DERATING CURVE

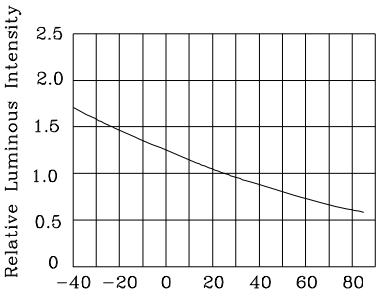

LUMINOUS INTENSITY Vs.
AMBIENT TEMPERATURE

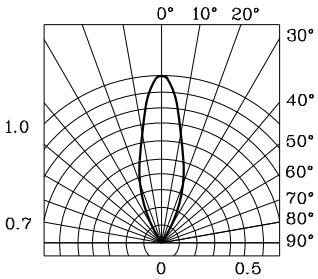

SPATIAL DISTRIBUTION

Reflow Soldering Profile For Lead-free SMT Process.

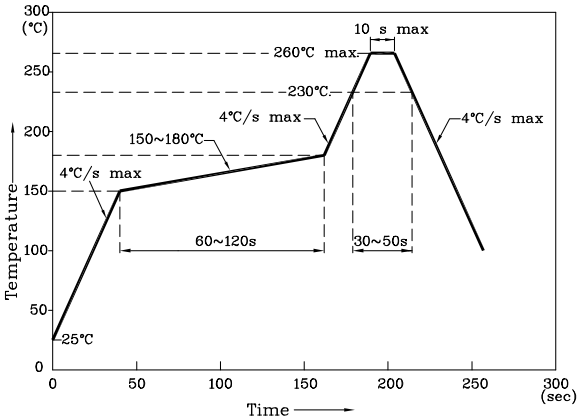

NOTES:

1. Maximum soldering temperature should not exceed 260°c.
2. Recommended reflow temperature: 145°c–260°c.
3. Do not put stress to the epoxy resin during high temperatures conditions.

❖ Recommended Soldering Pattern (Units : mm; Tolerance: ±0.1)

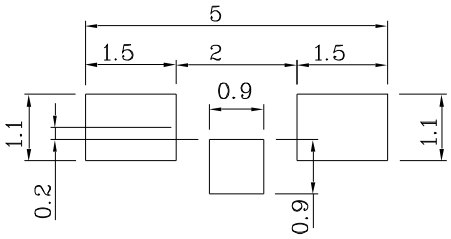

❖ The device has a single mounting surface. The device must be mounted according to the specifications.

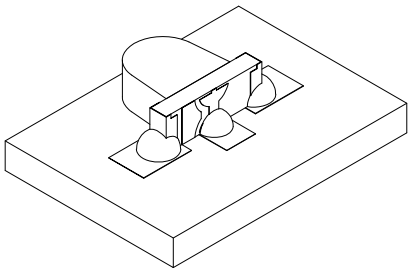

❖ Tape Specification (Units : mm)

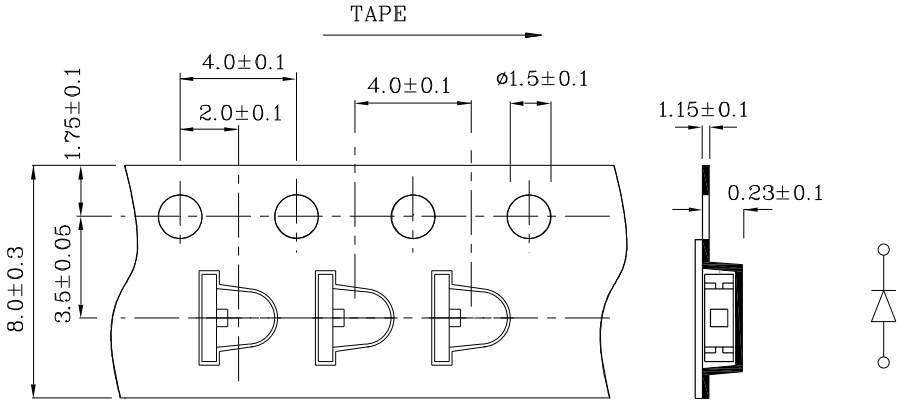

Remarks:

If special sorting is required (e.g. binning based on forward voltage, luminous intensity / luminous flux or wavelength), the typical accuracy of the sorting process is as follows:

1. Wavelength: +/-1nm
2. Luminous Intensity / luminous flux: +/-15%
3. Forward Voltage: +/-0.1V

Note: Accuracy may depend on the sorting parameters.
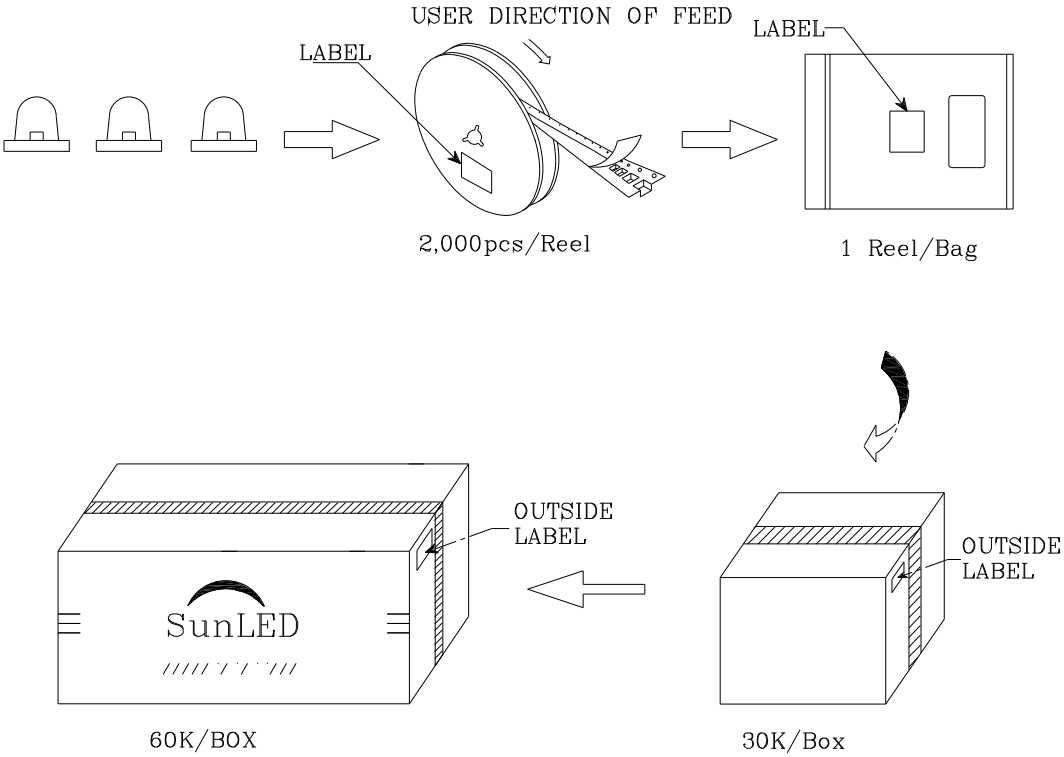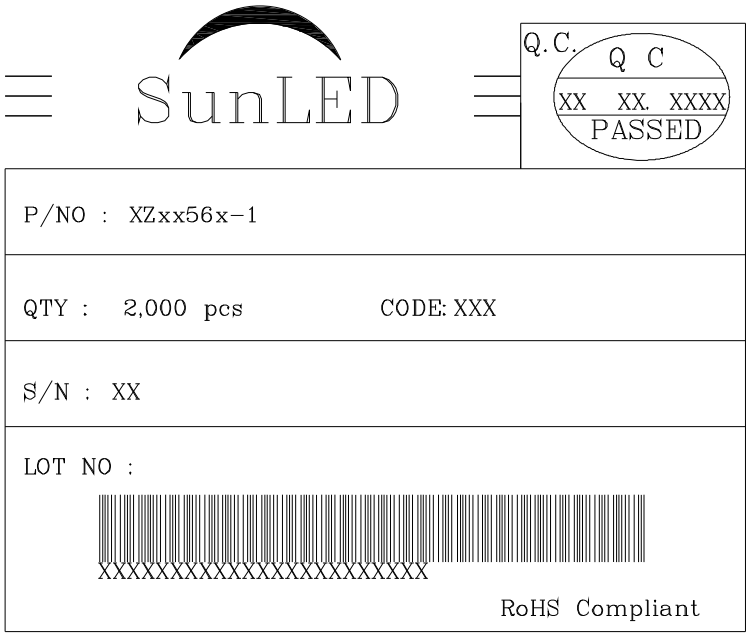
PACKING & LABEL SPECIFICATIONS XZMO56W-1