PRELIMINARY SPEC

PATENT PENDING

Features

- PLCC-4 PACKAGE.
- SINGLE COLOR.
- HIGH LUMINANCE.
- HIGH POWER,OPERATING CURRENT @ 350MA.
- SUITABLE FOR ALL SMT ASSEMBLY METHODS.
- PACKAGE : 500PCS / REEL.
- MOISTURE SENSITIVITY LEVEL : LEVEL 4.
- RoHS COMPLIANT.

Outline Drawings

Applications

- Traffic signaling.
- Backlighting (illuminated advertising , general lighting).
- Interior and exterior automotive lighting.
- Substitution of micro incandescent lamps.
- Portable light source (e.g. bicycle flashlight).
- Signal and symbol luminaire for orientation.
- Marker lights (e.g. steps, exit ways, etc).
- Decorative and entertainment lighting .
- Indoor and outdoor commercial and residential architectural lighting.

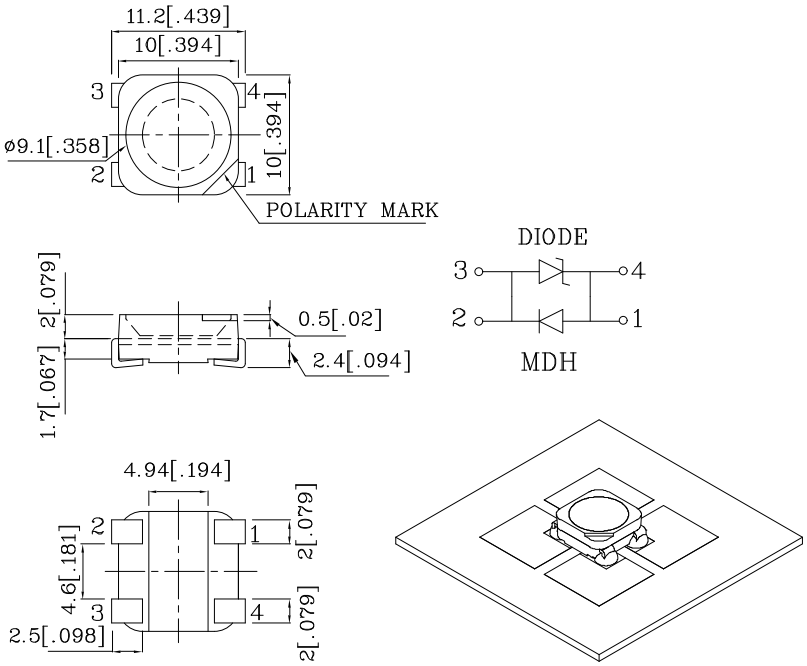

Notes:

1. All dimensions are in millimeters (inches).
2. Tolerance is ± 0.25(0.01") unless otherwise noted.
3. The device has a single mounting surface. The device must be mounted according to the specifications.
4. Specifications are subject to change without notice.

Part Number	Emitting Color	Emitting Material	Lens-color	Luminous Intensity (IF=350mA)[1] cd		Luminous Flux (IF=350mA) lm		Wavelength nm λ P	Viewing Angle 2 θ 1/2 [2]
				min.	typ.	min.	typ.		
XZMDH95W	Reddish-Orange	InGaAlP	Water Clear	7.5	10	18	27	640	120°

Absolute Maximum Ratings at T_A=25°C

Parameter	Symbol	Value	Unit
Power Dissipation	P_t	1.05	W
Junction Temperature	T_J	110	°C
Operating Temperature	Top	-40 To +85	°C
Storage Temperature	Tstg	-40 To +85	°C
DC Forward Current[1]	I_F	350	mA
Peak Forward Current [3]	I_{FM}	500	mA
Thermal Resistance [1]	R_{th}	60	°C/W

Notes:
1.Results from mounting on PC board FR4(pad size ≥ 100mm² per pad), mounted on pc board-metal core PCB is recommend for lowest thermal Resistance.
2.θ 1/2 is the angle from optical centerline where the luminous intensity is 1/2 the optical centerline value.
3.1/10 Duty Cycle, 0.1ms Pulse Width.

Electrical / Optical Characteristics at T_A=25°C

Parameter	Symbol	Value	Unit
Wavelength Of Peak Emission I_F=350mA [Typ.]	λ peak	640	nm
Dominant Wavelength I_F=350mA [Typ.]	λ dom	625	nm
Spectral Bandwidth at 50%$\Phi_{REL\ MAX}$ I_F=350mA [Typ.]	Δλ	30	nm
Forward Voltage I_F=350mA [Min.]	V_F	2.0	V
Forward Voltage I_F=350mA [Typ.]		2.5	
Forward Voltage I_F=350mA [Max.]		3.0	
Temperature Coefficient Of lpeak I_F=350mA, -10°C≤ T≤100°C [Typ.]	TC λ peak	0.14	nm/°C
Temperature Coefficient Of ldom I_F=350mA, -10°C≤ T≤100°C [Typ.]	TC λ dom	0.12	nm/°C
Temperature Coefficient Of V_F I_F=350mA, -10°C≤ T≤100°C [Typ.]	TC_V	-3.0	mV/°C

XZMDH95W

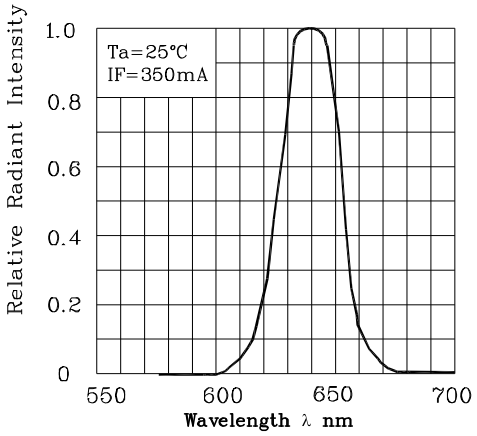

RELATIVE INTENSITY Vs. WAVELENGTH

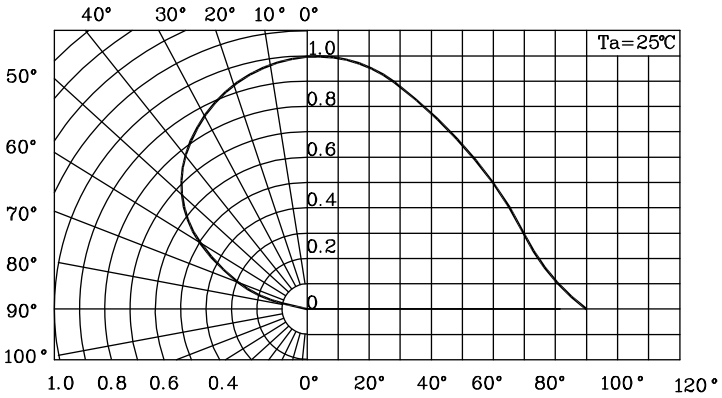

SPATIAL DISTRBUTION

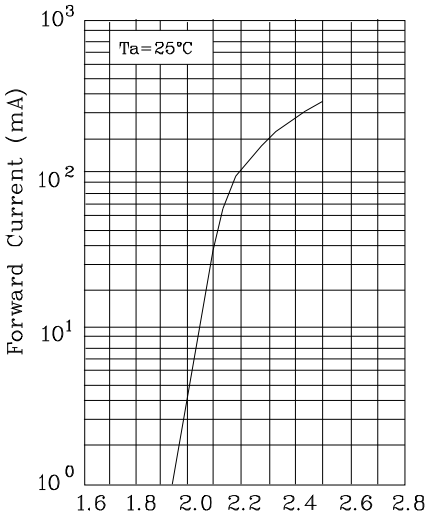

FORWARD CURRENT Vs.
FORWARD VOLTAGE

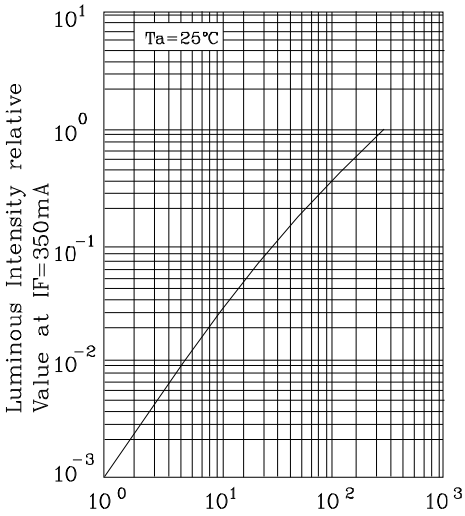

LUMINOUS INTENSITY Vs.
FORWARD CURRENT

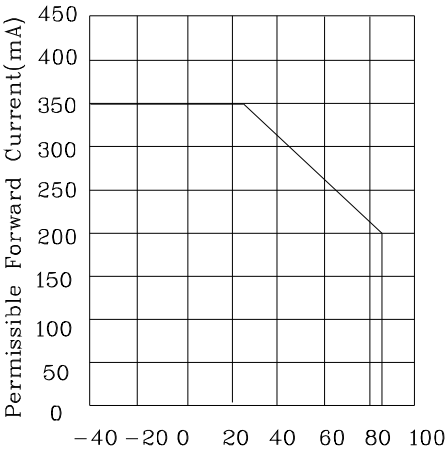

FORWARD CURRENT VS.
AMBIENT TEMPERATURE

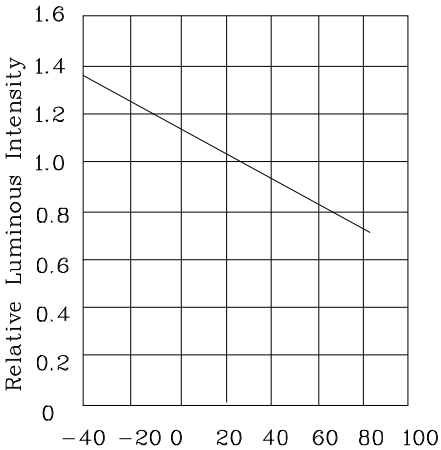

LUMINOUS INTENSITY VS.
AMBIENT TEMPERATURE

Reflow Soldering Profile For Lead-free SMT Process.

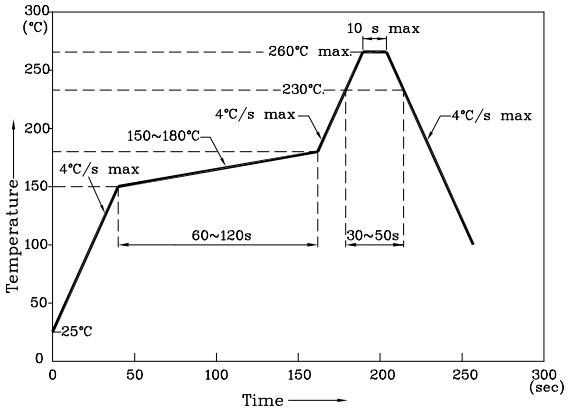

NOTES:

1. Maximum soldering temperature should not exceed 260°c.
2. Recommended reflow temperature: 145°c-260°c.
3. Do not put stress to the epoxy resin during high temperatures conditions.

❖ Recommended Soldering Pattern (Units: mm ; Tolerance: ± 0.1)

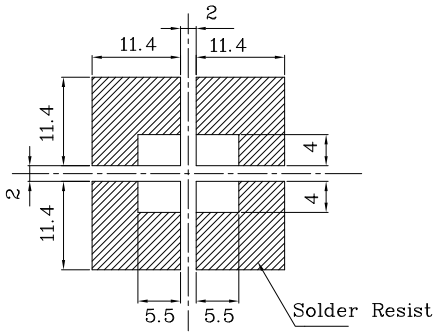

Reel Dimension

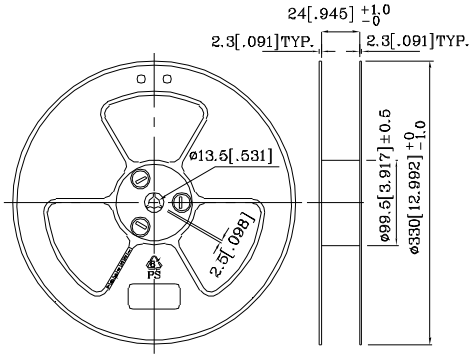

❖ Tape Specification (Units : mm)

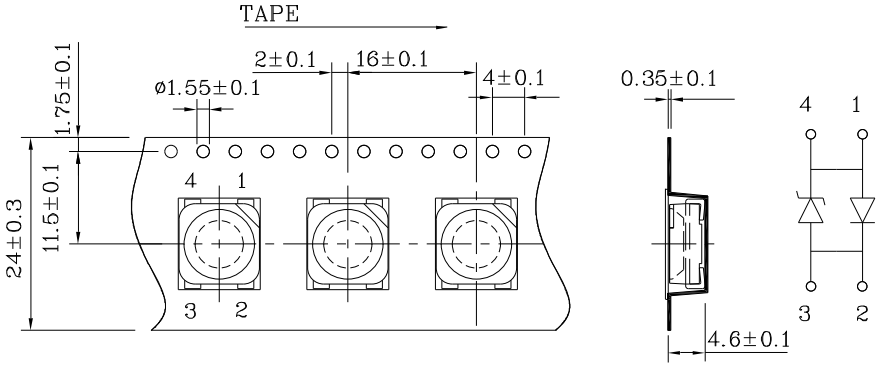

Remarks:

If special sorting is required (e.g. binning based on forward voltage, luminous intensity/ luminous flux or wavelength), the typical accuracy of the sorting process is as follows:

1. Wavelength: +/-1nm
2. Luminous Intensity/ Luminous Flux: +/-15%
3. Forward Voltage: +/-0.1V

Note: Accuracy may depend on the sorting parameters.
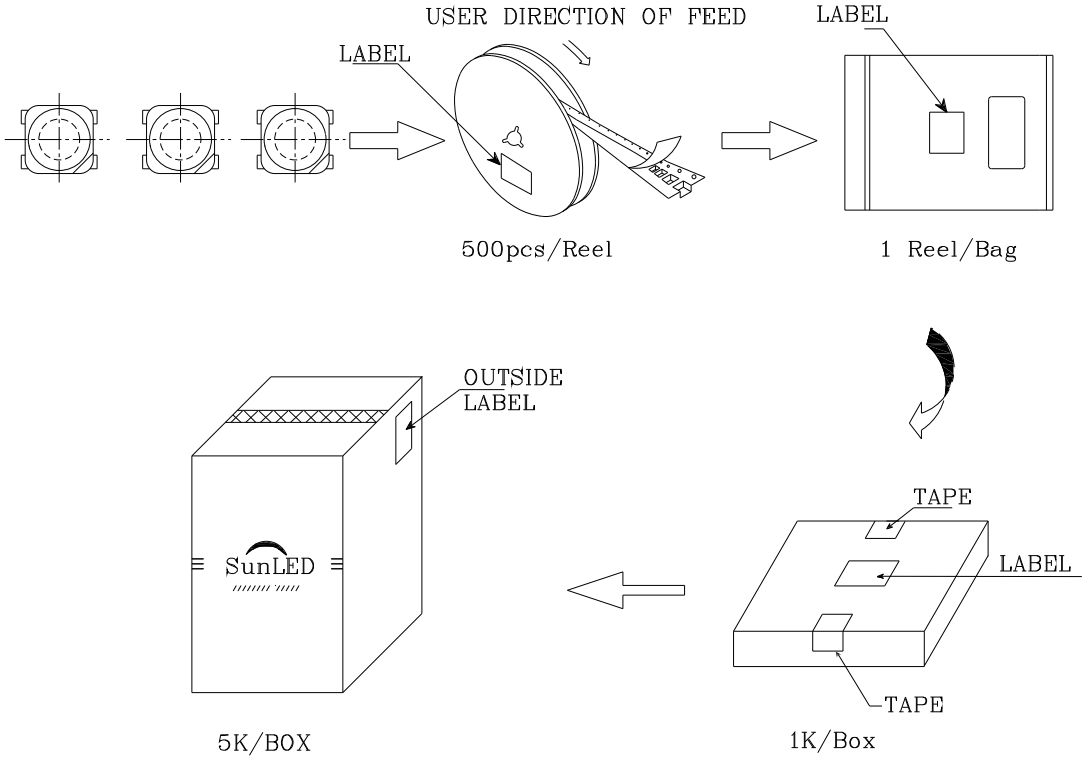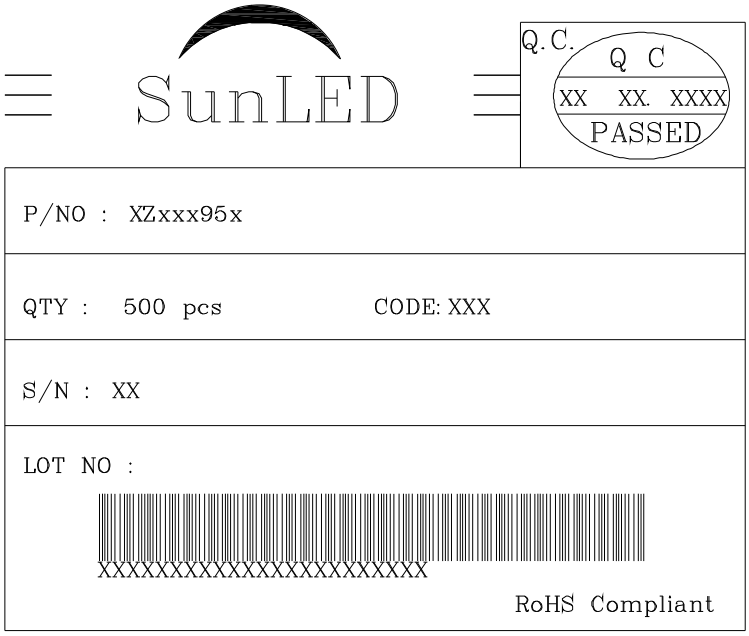
PACKING & LABEL SPECIFICATIONS **XZMDH95W**