SunLED
www.SunLEDusa.com

Part Number: XZM2NW67S

4.0x4.0mm RIGHT ANGLE SURFACE MOUNT LED LAMP

PRELIMINARY SPEC

Features

- Single color.
- Suitable for all SMT assembly and solder process.
- Available on tape and reel.
- Ideal for backlighting.
- Package : 500pcs / reel.
- Moisture sensitivity level : level 4.
- RoHS compliant.

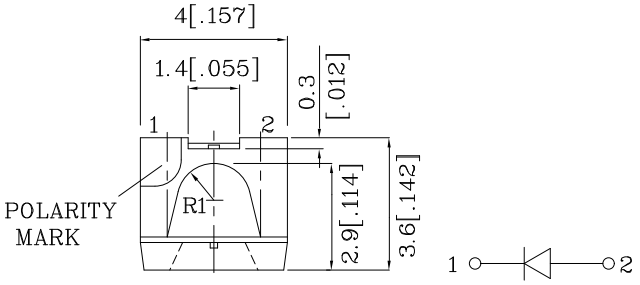

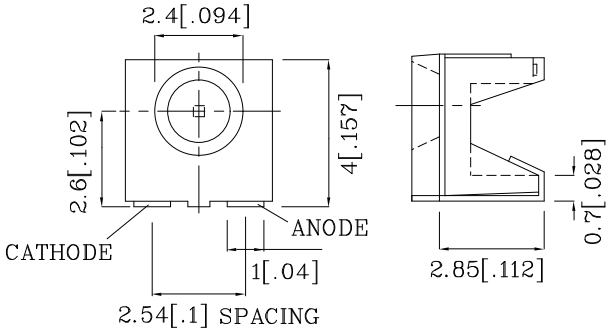

ATTENTION
OBSERVE PRECAUTIONS FOR HANDLING ELECTROSTATIC DISCHARGE SENSITIVE DEVICES

Notes:

1. All dimensions are in millimeters (inches).
2. Tolerance is ± 0.25(0.01") unless otherwise noted.
3. Specifications are subject to change without notice.

Absolute Maximum Ratings (T_A=25°C)		**M2NW (InGaN)**	**Unit**
Reverse Voltage	V_R	5	V
Forward Current	I_F	30	mA
Forward Current (Peak) 1/10 Duty Cycle 0.1ms Pulse Width	i_{FS}	100	mA
Power Dissipation	P_T	111	mW
Operating Temperature	T_A	-40 ~ +85	°C
Storage Temperature	Tstg	-40 ~ +85	
Electrostatic Discharge Threshold (HBM)		1000	V

Operating Characteristics (T_A=25°C)		**M2NW (InGaN)**	**Unit**
Forward Voltage (Typ.) (I_F=20mA)	V_F	3.2	V
Forward Voltage (Max.) (I_F=20mA)	V_F	3.7	V
Reverse Current (Max.) (V_R=5V)	I_R	10	uA
Chromaticity Coordinates (Typ.)	X	0.31	
	Y	0.31	
Capacitance (Typ.) (V_F=0V, f=1MHz)	C	110	pF

Part Number	Emitting Color	Emitting Material	Lens-color	Luminous Intensity (IF=20mA) mcd		Viewing Angle 2 θ 1/2
				min.	typ.	
XZM2NW67S	White	InGaN	Water Clear	480	1195	120°

Handling Precautions

Compare to epoxy encapsulant that is hard and brittle, silicone is softer and flexible. Although its characteristic significantly reduces thermal stress, it is more susceptible to damage by external mechanical force.
As a result, special handling precautions need to be observed during assembly using silicone encapsulated LED products. Failure to comply might leads to damage and premature failure of the LED.

1. Handle the component along the side surfaces by using forceps or appropriate tools.

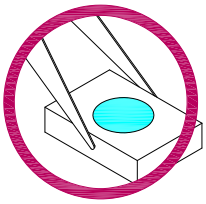

2. Do not directly touch or handle the silicone lens surface. It may damage the internal circuitry.

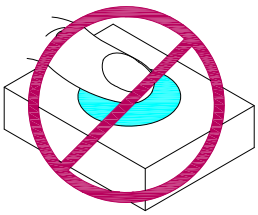

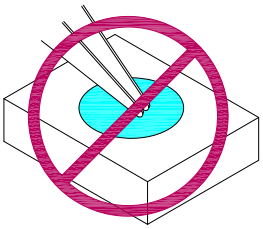

3. Do not stack together assembled PCBs containing exposed LEDs.Impact may scratch the silicone lens or damage the internal circuitry.

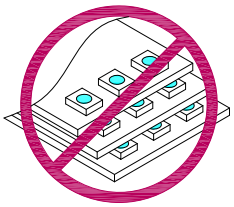

4. The outer diameter of the SMD pickup nozzle should not exceed the size of the LED to prevent air leaks. The inner diameter of the nozzle should be as large as possible.
5. A pliable material is suggested for the nozzle tip to avoid scratching or damaging the LED surface during pickup.
6. The dimensions of the component must be accurately programmed in the pick-and-place machine to insure precise pickup and avoid damage during production.

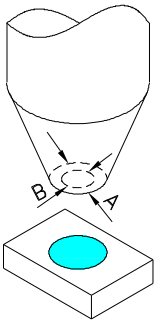

❖ **M2NW**

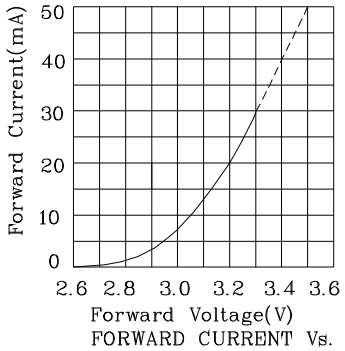

FORWARD CURRENT Vs. FORWARD VOLTAGE

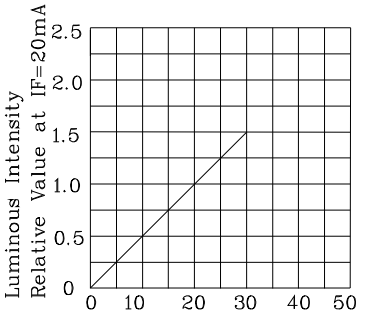

LUMINOUS INTENSITY Vs. FORWARD CURRENT

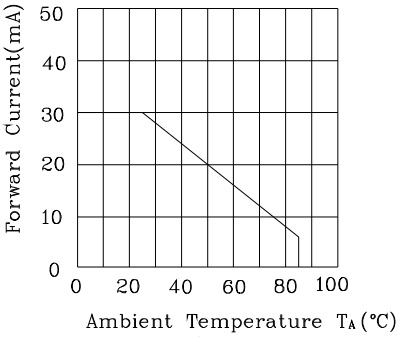

FORWARD CURRENT DERATING CURVE

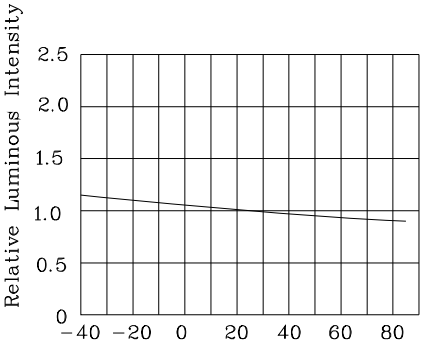

LUMINOUS INTENSITY Vs. AMBIENT TEMPERATURE

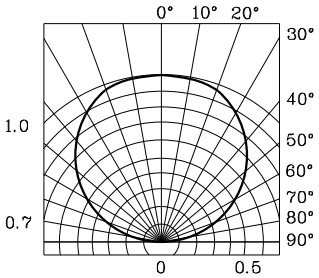

SPATIAL DISTRIBUTION

XZM2NW67S

White CIE

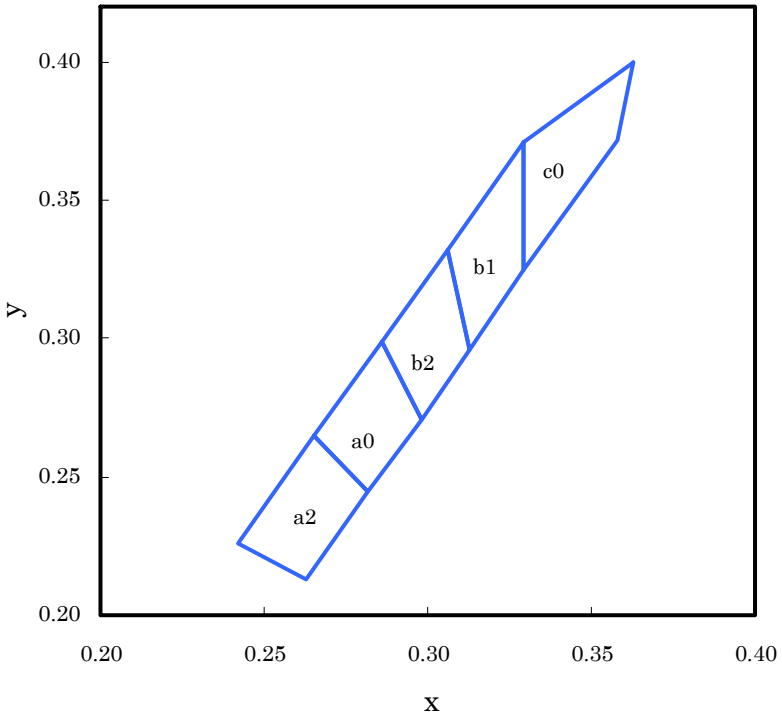

Rank a2				
X	0.263	0.282	0.265	0.242
Y	0.213	0.245	0.265	0.226

Rank a0				
X	0.282	0.298	0.286	0.265
Y	0.245	0.271	0.299	0.265

Rank b2				
X	0.298	0.313	0.306	0.286
Y	0.271	0.296	0.332	0.299

Rank b1				
X	0.313	0.329	0.329	0.306
Y	0.296	0.325	0.371	0.332

Rank c0				
X	0.329	0.358	0.363	0.329
Y	0.325	0.372	0.400	0.371

Reflow Soldering Profile For Lead-free SMT Process.

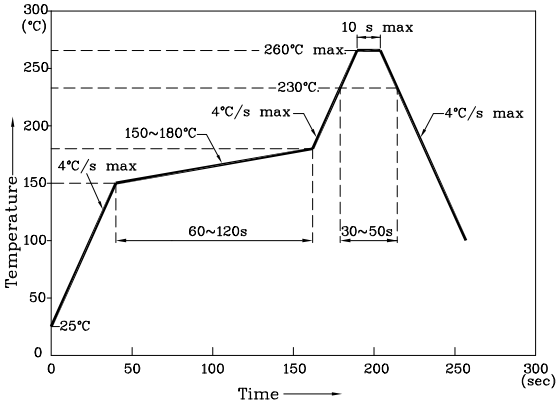

NOTES:

1. Maximum soldering temperature should not exceed 260°c.
2. Recommended reflow temperature: 145°c–260°c.
3. Do not put stress to the epoxy resin during high temperatures conditions.

❖ Recommended Soldering Pattern (Units : mm;Tolerance:± 0.1)

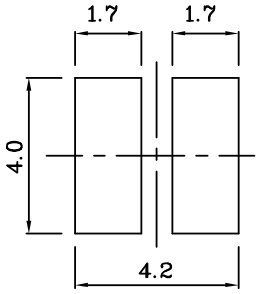

❖ The device has a single mounting surface. The device must be mounted according to the specifications.

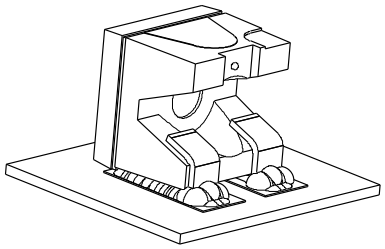

❖ Tape Specification (Units : mm)

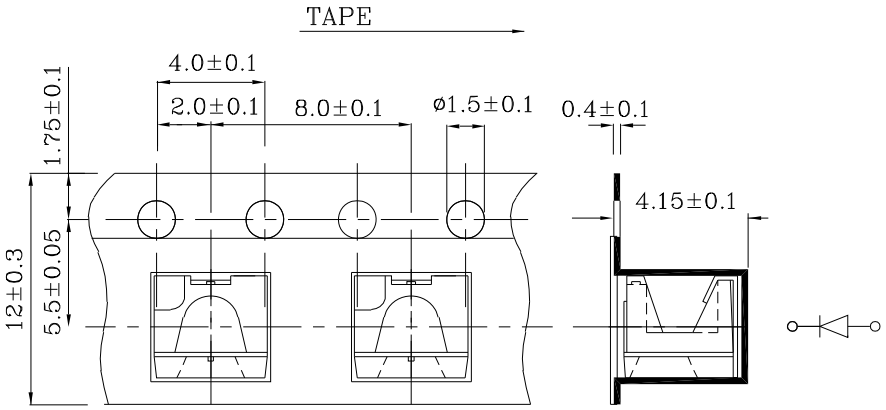

Remarks:

If special sorting is required (e.g. binning based on forward voltage, Luminous intensity / luminous flux, or chromaticity), the typical accuracy of the sorting process is as follows:

1. Measurement tolerance of the chromaticity coordinates is ±0.01.
2. Luminous Intensity / Luminous Flux: +/-15%
3. Forward Voltage: +/-0.1V

Note: Accuracy may depend on the sorting parameters.
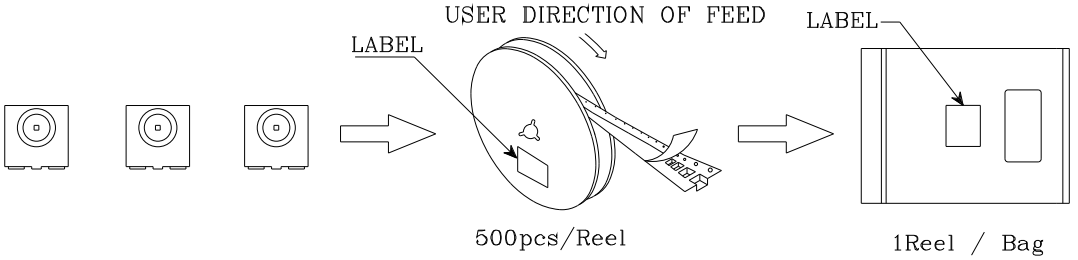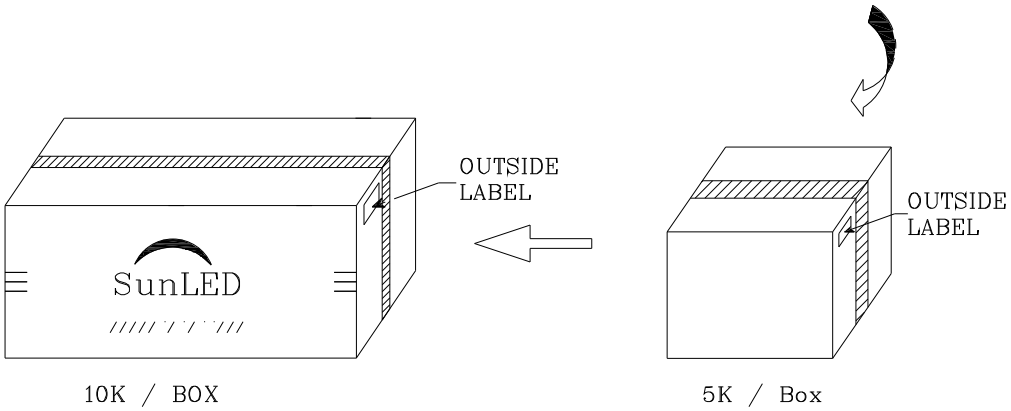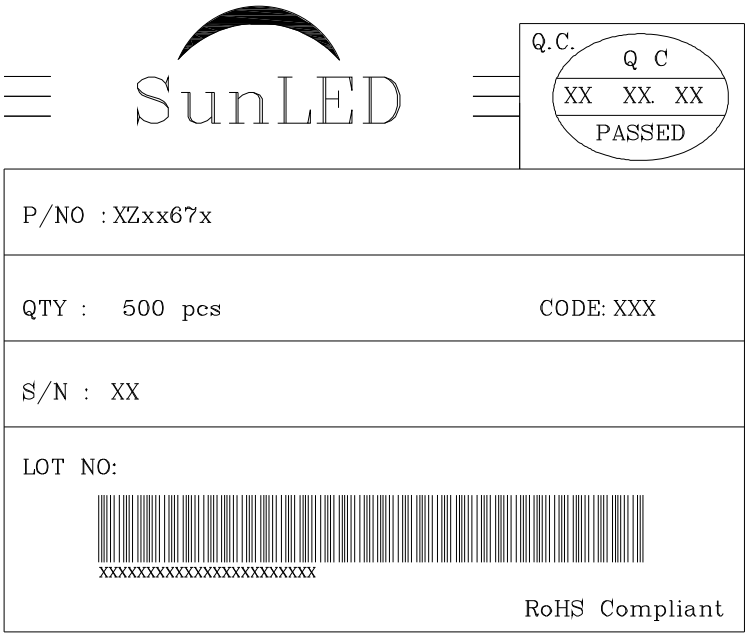
PACKING & LABEL SPECIFICATIONS XZM2NW67S