Part Number: XZFBB45S-9

3.2x2.8mm SURFACE MOUNT LED LAMP

Features

- Ideal for indication light on hand held products
- Long life and robust package
- Variety of lens types and color choices available
- Package : 1500pcs / reel
- Moisture sensitivity level : level 3
- RoHS compliant

ATTENTION
OBSERVE PRECAUTIONS
FOR HANDLING
ELECTROSTATIC
DISCHARGE
SENSITIVE
DEVICES

Package Schematics

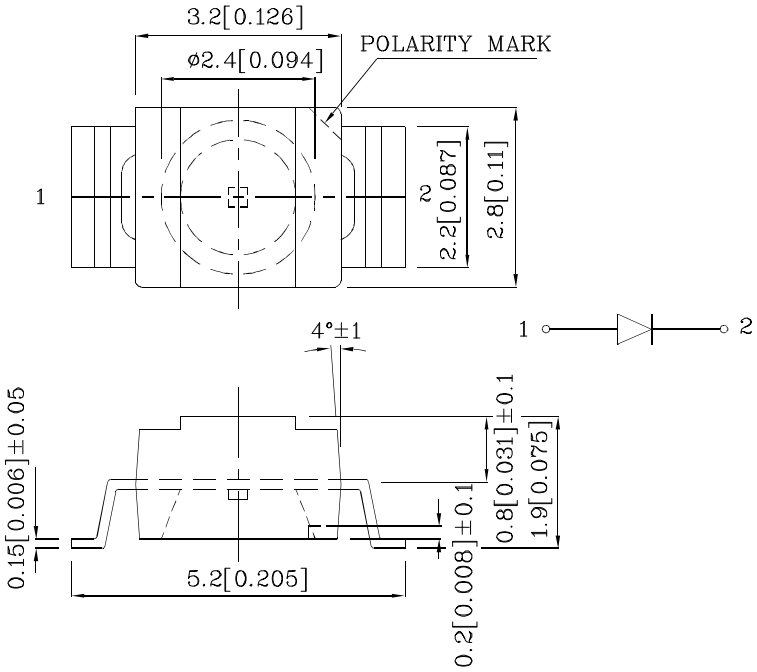

Notes:
1. All dimensions are in millimeters (inches).
2. Tolerance is ±0.25(0.01") unless otherwise noted.
3. Specifications are subject to change without notice.

Absolute Maximum Ratings (T_A=25°C)		FBB (InGaN)	Unit
Reverse Voltage	V_R	5	V
Forward Current	I_F	30	mA
Forward Current (Peak) 1/10 Duty Cycle 0.1ms Pulse Width	i_{FS}	100	mA
Power Dissipation	P_D	120	mW
Operating Temperature	T_A	-40 ~ +85	°C
Storage Temperature	Tstg	-40 ~ +85	
Electrostatic Discharge Threshold (HBM)		250	V

Operating Characteristics (T_A=25°C)		FBB (InGaN)	Unit
Forward Voltage (Typ.) (I_F=20mA)	V_F	3.3	V
Forward Voltage (Max.) (I_F=20mA)	V_F	4	V
Reverse Current (Max.) (V_R=5V)	I_R	50	uA
Wavelength of Peak Emission (Typ.) (I_F=20mA)	λP	465	nm
Wavelength of Dominant Emission (Typ.) (I_F=20mA)	λD	470	nm
Spectral Line Full Width At Half-Maximum (Typ.) (I_F=20mA)	△λ	22	nm
Capacitance (Typ.) (V_F=0V, f=1MHz)	C	100	pF

Part Number	Emitting Color	Emitting Material	Lens-color	Luminous Intensity (I_F=20mA) mcd		Wavelength nm λP	Viewing Angle 2θ 1/2
				min.	typ.		
XZFBB45S-9	Blue	InGaN	Water Clear	300	447	465	120°

Handling Precautions

Compare to epoxy encapsulant that is hard and brittle, silicone is softer and flexible. Although its characteristic significantly reduces thermal stress, it is more susceptible to damage by external mechanical force.
As a result, special handling precautions need to be observed during assembly using silicone encapsulated LED products. Failure to comply might lead to damage and premature failure of the LED.

1. Handle the component along the side surfaces by using forceps or appropriate tools.

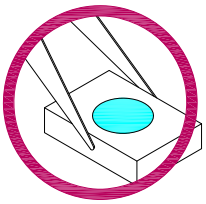

2. Do not directly touch or handle the silicone lens surface. It may damage the internal circuitry.

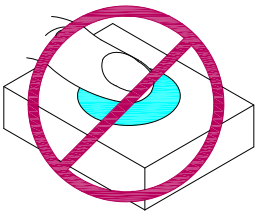

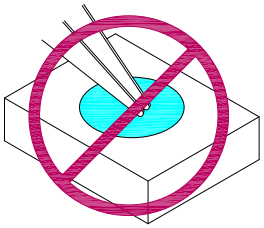

3. Do not stack together assembled PCBs containing exposed LEDs. Impact may scratch the silicone lens or damage the internal circuitry.

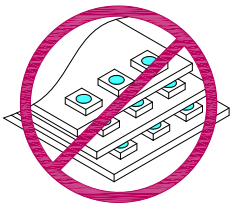

4.1. The outer diameter of the SMD pickup nozzle should not exceed the size of the LED to prevent air leaks. The inner diameter of the nozzle should be as large as possible.
4.2. A pliable material is suggested for the nozzle tip to avoid scratching or damaging the LED surface during pickup.
4.3. The dimensions of the component must be accurately programmed in the pick-and-place machine to insure precise pickup and avoid damage during production.

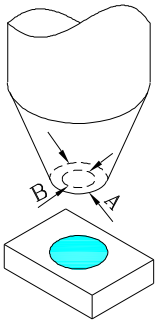

5. As silicone encapsulation is permeable to gases, some corrosive substances such as H_2S might corrode silver plating of leadframe. Special care should be taken if an LED with silicone encapsulation is to be used near such substances.

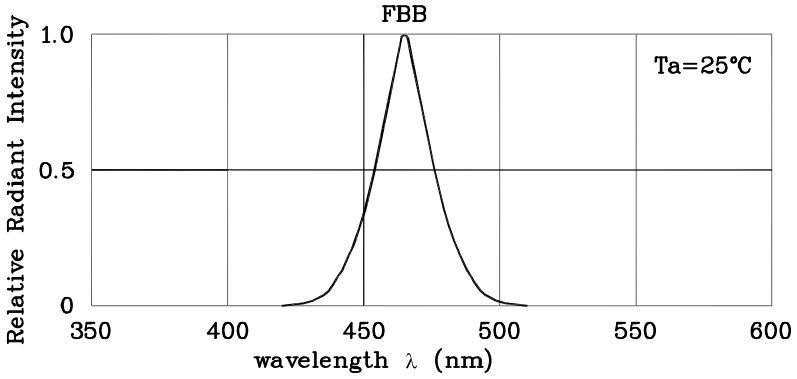

RELATIVE INTENSITY Vs. WAVELENGTH

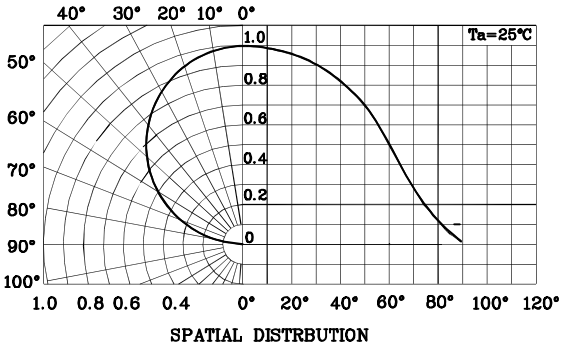

SPATIAL DISTRBUTION

❖ FBB

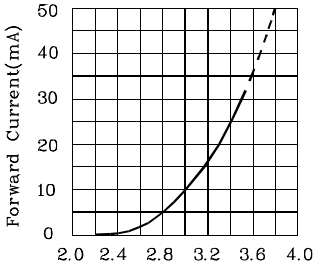

FORWARD CURRENT Vs. FORWARD VOLTAGE

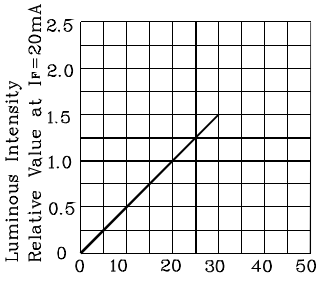

LUMINOUS INTENSITY Vs. FORWARD CURRENT

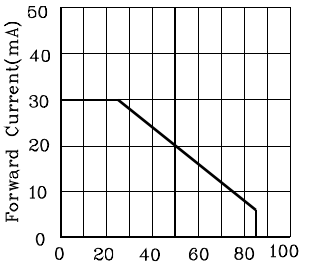

FORWARD CURRENT DERATING CURVE

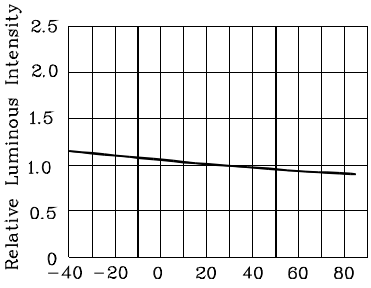

LUMINOUS INTENSITY Vs. AMBIENT TEMPERATURE

LED is recommended for reflow soldering and soldering profile is shown below.

Reflow Soldering Profile for SMD Products (Pb−Free Components)

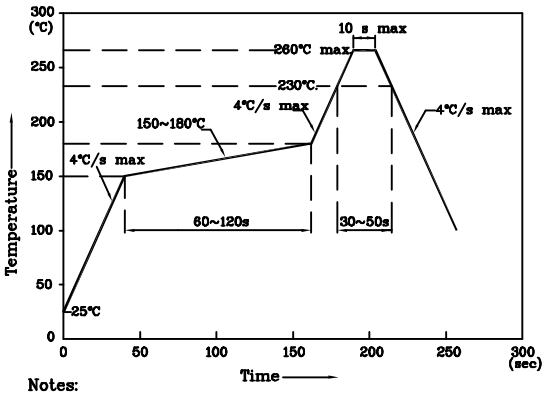

Notes:
1. Maximum soldering temperature should not exceed 260℃
2. Recommended reflow temperature: 145℃−260℃
3. Do not put stress to the epoxy resin during high temperatures conditions

❖ The device has a single mounting surface. The device must be mounted according to the specifications.

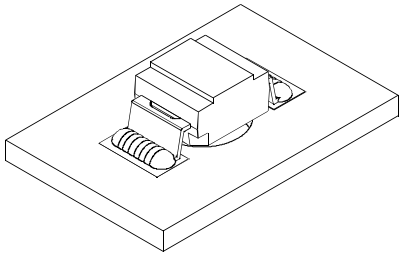

❖ Recommended Soldering Pattern (Units : mm; Tolerance: ± 0.1)

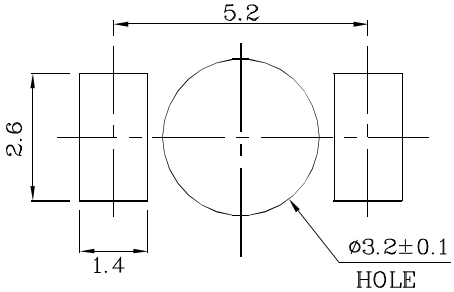

❖ Reel Dimension

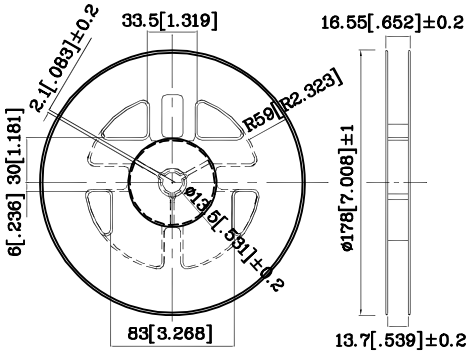

❖ Tape Specification (Units : mm)

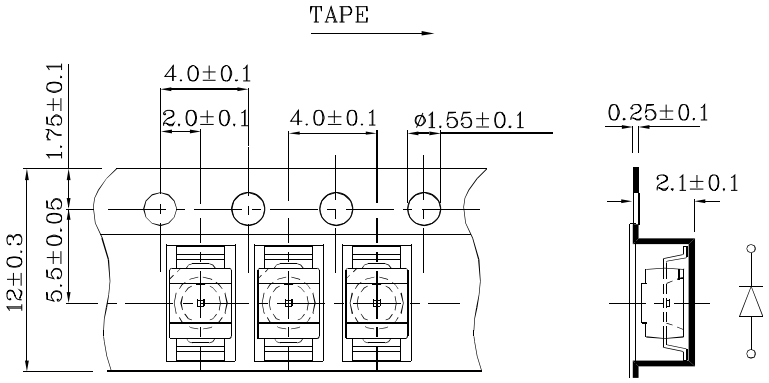

Remarks:

If special sorting is required (e.g. binning based on forward voltage, Luminous intensity / luminous flux, or wavelength), the typical accuracy of the sorting process is as follows:

1. Wavelength: +/-1nm
2. Luminous intensity / luminous flux: +/-15%
3. Forward Voltage: +/-0.1V

Note: Accuracy may depend on the sorting parameters.
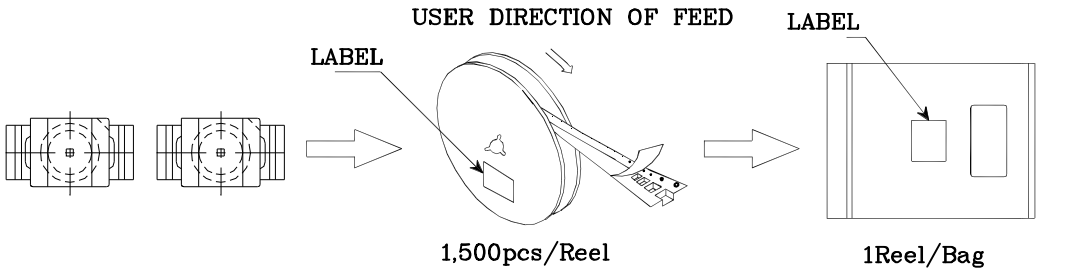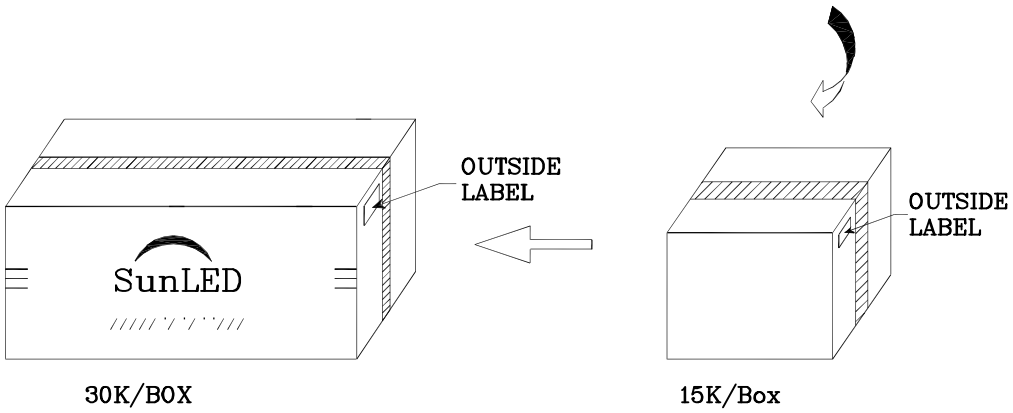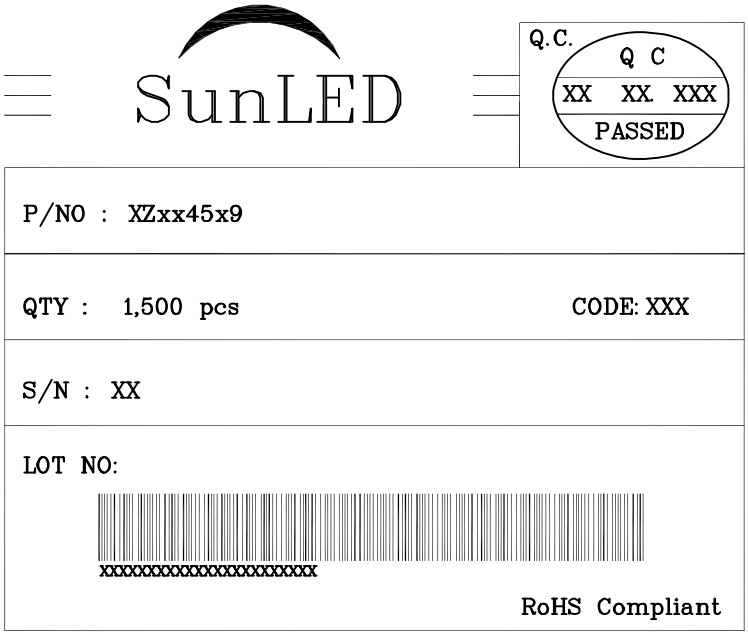
PACKING & LABEL SPECIFICATIONS