SunLED
www.SunLED.com

Part Number: **XZDVG07A2**

SURFACE MOUNT DISPLAY

Features

- 0.3NCH DIGIT HEIGHT.
- LOW CURRENT OPERATION.
- EXCELLENT CHARACTER APPEARANCE.
- I.C. COMPATIBLE.
- MECHANICALLY RUGGED.
- GRAY FACE, WHITE SEGMENT.
- PACKAGE : 600PCS / REEL.
- RoHS COMPLIANT.

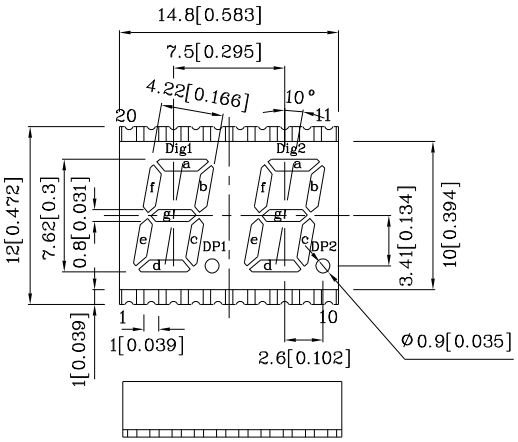

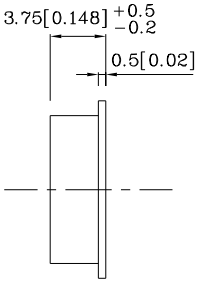

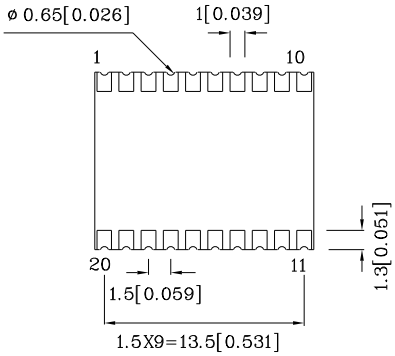

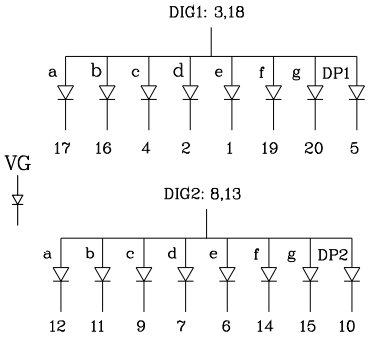

Notes:

1. All dimensions are in millimeters (inches).
2. Tolerance is ± 0.25(0.01") unless otherwise

Absolute Maximum Ratings (TA=25°C)		**VG (InGaAlP)**	**Unit**
Reverse Voltage	V_R	5	V
Forward Current	I_F	30	mA
Forward Current (Peak) 1/10 Duty Cycle 0.1ms Pulse Width	i_{FS}	150	mA
Power Dissipation	P_T	105	mW
Operating Temperature	T_A	-40 ~ +85	°C
Storage Temperature	Tstg	-40 ~ +85	

Operating Characteristics (TA=25°C)		**VG (InGaAlP)**	**Unit**
Forward Voltage (Typ.) (I_F=10mA)	V_F	2.0	V
Forward Voltage (Max.) (I_F=10mA)	V_F	2.5	V
Reverse Current (V_R=5V)	I_R	10	uA
Wavelength of Peak Emission (I_F=10mA)	λ P	574	nm
Wavelength of Dominant Emission (I_F=10mA)	λ D	570	nm
Spectral Line Full Width At Half-Maximum (I_F=10mA)	Δλ	20	nm
Capacitance (V_F=0V, f=1MHz)	C	15	pF

Part Number	Emitting Color	Emitting Material	Luminous Intensity (IF=10mA) ucd min.	Luminous Intensity (IF=10mA) ucd typ.	Wavelength nm λ P	Description
XZDVG07A2	Green	InGaAlP	1900	10990	574	Common Anode.Rt. Hand Decimal

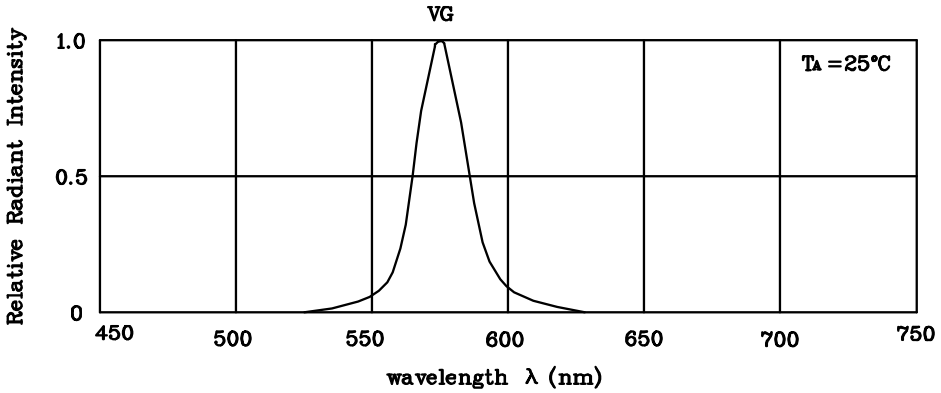

RELATIVE INTENSITY Vs. WAVELENGTH

❖ **VG**

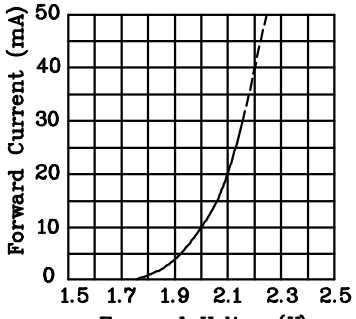

FORWARD CURRENT Vs. FORWARD VOLTAGE

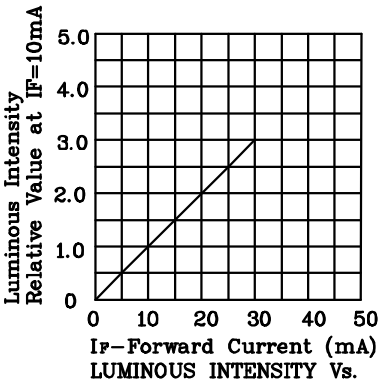

LUMINOUS INTENSITY Vs. FORWARD CURRENT

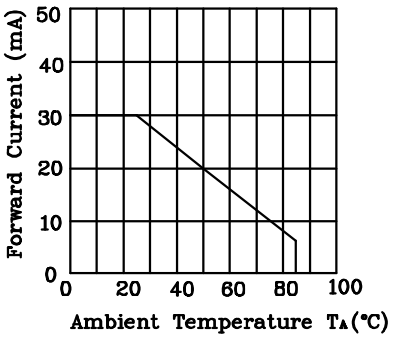

FORWARD CURRENT DERATING CURVE

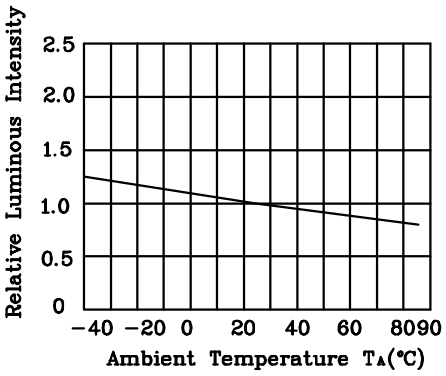

LUMINOUS INTENSITY Vs. AMBIENT TEMPERATURE

Reflow Soldering Profile For Lead-free SMT Process.

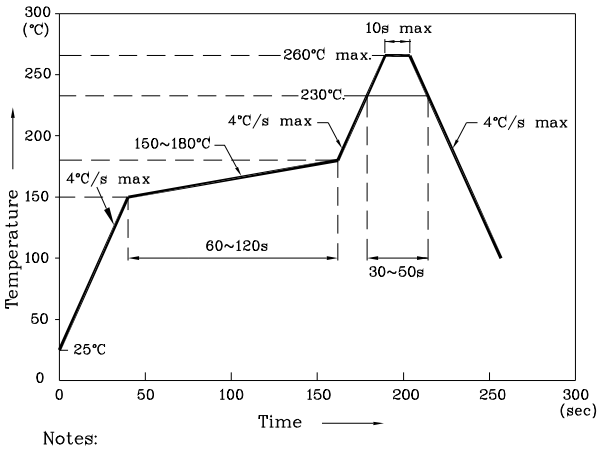

Notes:

1. Maximum soldering temperature should not exceed 260℃.
2. Recommended reflow temperature: 145℃-260℃.
3. Do not put stress to the epoxy resin during high temperatures conditions.

❖ Recommended Soldering Pattern (Units : mm;Tolerance:± 0.15)

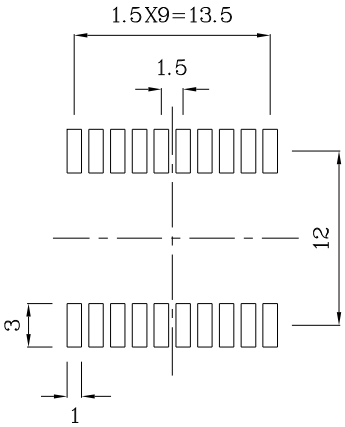

❖ Tape Specification (Units : mm)

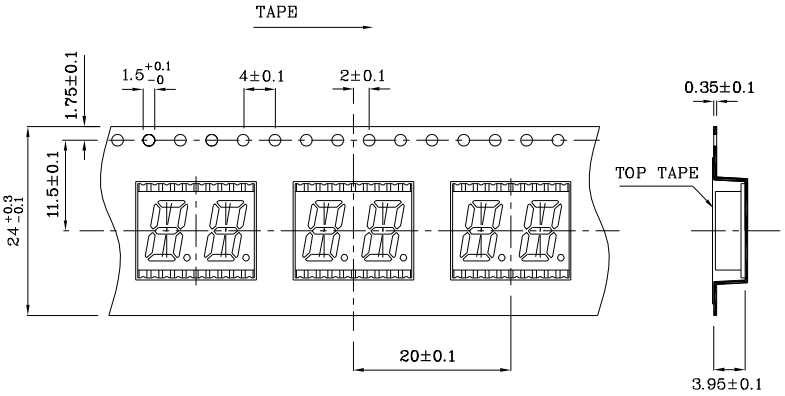

Remarks:

If special sorting is required (e.g. binning based on forward voltage, luminous intensity, or wavelength), the typical accuracy of the sorting process is as follows:

1. Wavelength: +/-1nm
2. Luminous Intensity: +/-15%
3. Forward Voltage: +/-0.1V

Note: Accuracy may depend on the sorting parameters.