SunLED
www.SunLED.com

Part Number: **XZDMDK14A**

SURFACE MOUNT DISPLAY

Features

- 0.56 INCH DIGIT HEIGHT.
- LOW CURRENT OPERATION.
- EXCELLENT CHARACTER APPEARANCE.
- I.C. COMPATIBLE.
- MECHANICALLY RUGGED.
- GRAY FACE,WHITE SEGMENT.
- PACKAGE : 800PCS / REEL.

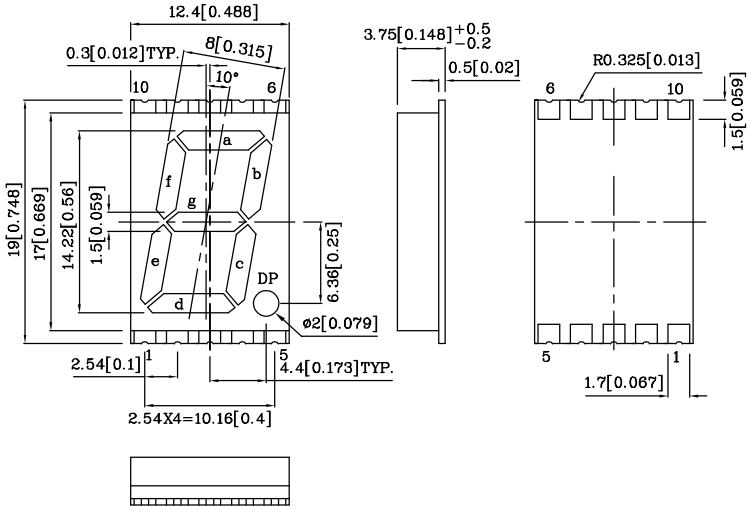

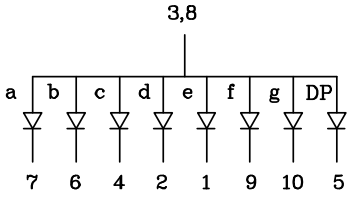

Notes:

1. All dimensions are in millimeters (inches).
2. Tolerance is ± 0.25(0.01") unless otherwise noted.

Absolute maximum ratings (TA=25°C)		**MDK (InGaAlP)**	**Unit**
Reverse voltage	VR	5	V
Forward current	IF	30	mA
Forward current (peak) 1/10Duty cycle 0.1ms pulse width	iFS	185	mA
Power dissipation	PT	170	mW
Operating temperature	TA	-40 ~ +85	°C
Storage temperature	Tstg	-40 ~ +85	

Operating Characteristics (TA=25°C)		**MDK (InGaAlP)**	**Unit**
Forward voltage (typ.) (IF=10mA)	VF	1.85	V
Forward voltage (max.) (IF=10mA)	VF	2.5	V
Reverse current (VR=5V)	IR	10	uA
Wavelength at peak emission (IF=10mA)	λ peak	650	nm
Wavelength at Dominate emission (IF=10mA)	λ D	635	nm
Spectral Line half-width (IF=10mA)	Δλ	28	nm
Capacitance (VF=0V, f=1MHz)	C	35	pF

Part Number	Emitting Color	Emitting Material	Luminous Intensity (IF=10mA) ucd		Wavelength nm λ P	Description
			min.	typ.		
XZDMDK14A	Red	InGaAlP	4700	17600	650	Common Anode.Rt. Hand Decimal

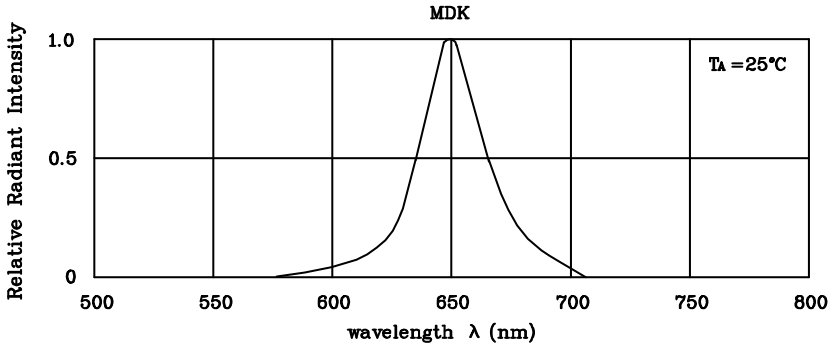

RELATIVE INTENSITY Vs. WAVELENGTH

❖ MDK

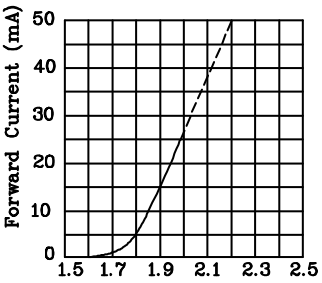

FORWARD CURRENT Vs.
FORWARD VOLTAGE

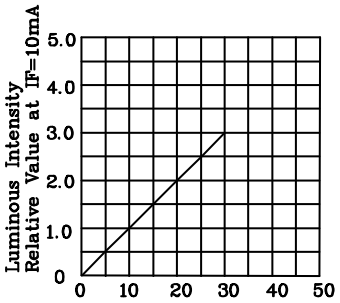

LUMINOUS INTENSITY Vs.
FORWARD CURRENT

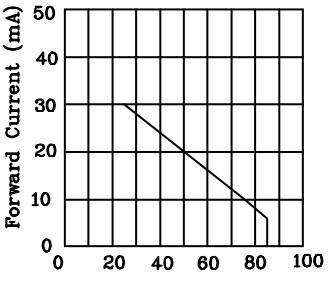

FORWARD CURRENT
DERATING CURVE

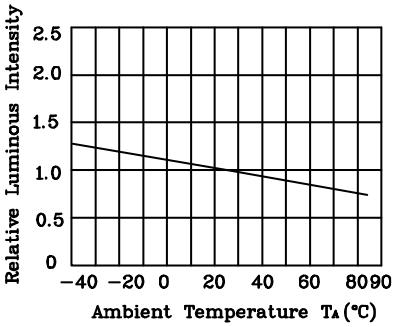

LUMINOUS INTENSITY Vs.
AMBIENT TEMPERATURE

❖ SMT Reflow Soldering Instructions

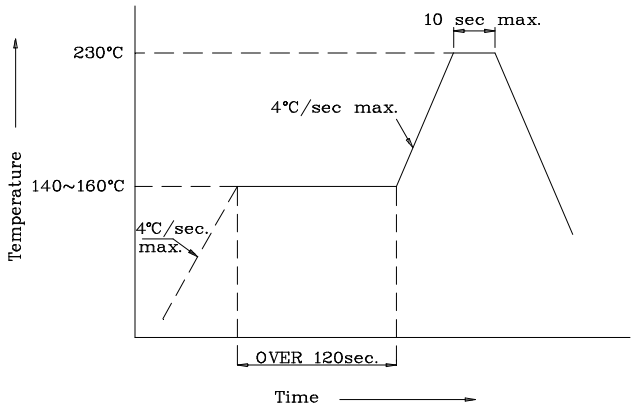

❖ Recommended Soldering Pattern (Units : mm;Tolerance:± 0.15)

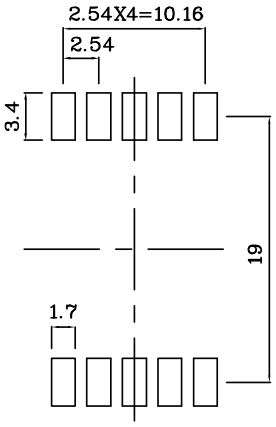
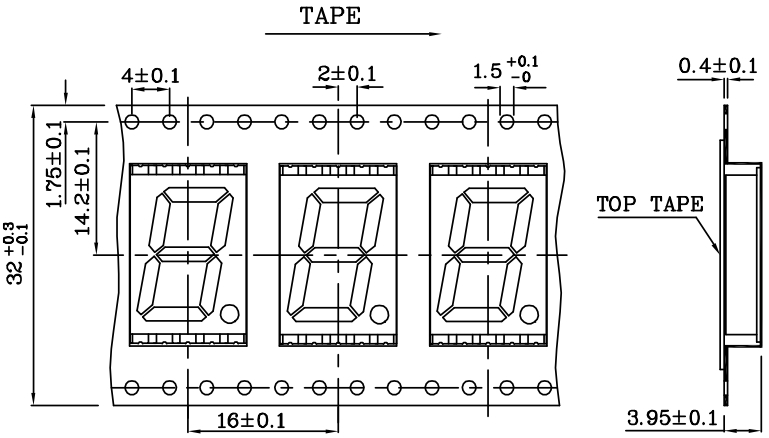
❖ Tape Specification (Units : mm)