SunLED
www.SunLED.com

Part Number: **XZDMDK10C**

SURFACE MOUNT DISPLAY

Features

- 0.4INCH DIGIT HEIGHT.
- LOW CURRENT OPERATION.
- EXCELLENT CHARACTER APPEARANCE.
- I.C. COMPATIBLE
- MECHANICALLY RUGGED.
- GRAY FACE,WHITE SEGMENT.
- PACKAGE : 800PCS / REEL.
- RoHS COMPLIANT.

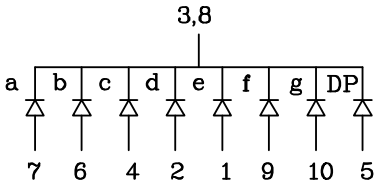

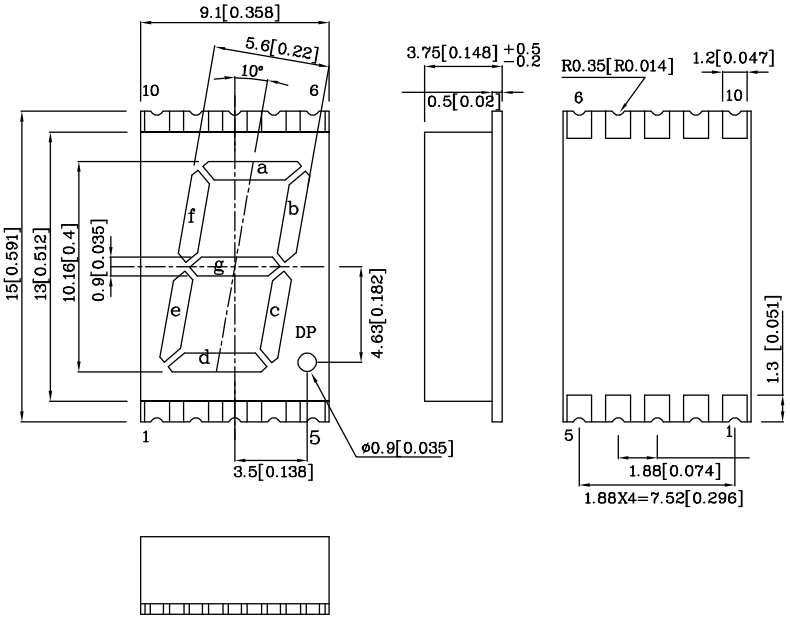

Notes:

1. All dimensions are in millimeters (inches).
2. Tolerance is ± 0.25(0.01") unless otherwise

Absolute Maximum Ratings (TA=25°C)		MDK (InGaAlP)	Unit
Reverse Voltage	VR	5	V
Forward Current	IF	30	mA
Forward Current (peak) 1/10 Duty Cycle 0.1ms Pulse Width	iFS	185	mA
Power Dissipation	PT	75	mW
Operating Temperature	TA	-40 ~ +85	°C
Storage Temperature	Tstg	-40 ~ +85	

Operating Characteristics (TA=25°C)		MDK (InGaAlP)	Unit
Forward Voltage (typ.) (I_F=10mA)	VF	1.85	V
Forward Voltage (max.) (I_F=10mA)	VF	2.5	V
Reverse Current (V_R=5V)	IR	10	uA
Wavelength of Peak Emission (I_F=10mA)	λ P	650	nm
Wavelength of Dominant Emission (I_F=10mA)	λ D	635	nm
Spectral Line Full Width At Half-Maximum (I_F=10mA)	Δλ	28	nm
Capacitance (V_F=0V, f=1MHz)	C	35	pF

Part Number	Emitting Color	Emitting Material	Luminous Intensity (IF=10mA) ucd		Wavelength nm λ P	Description
			min.	typ.		
XZDMDK10C	Red	InGaAlP	8000	25990	650	Common Cathode, Rt. Hand Decimal

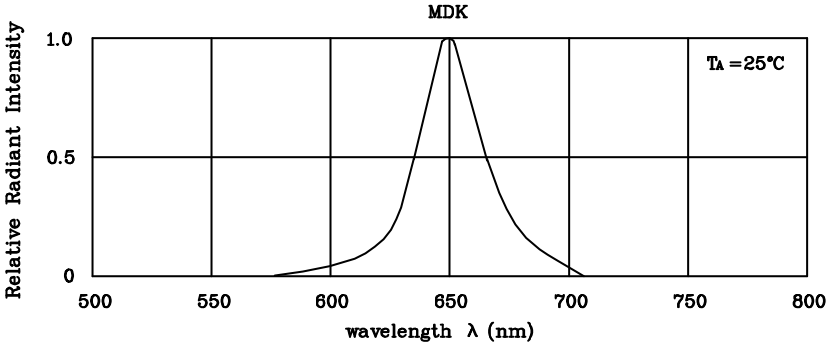

RELATIVE INTENSITY Vs. WAVELENGTH

❖ MDK

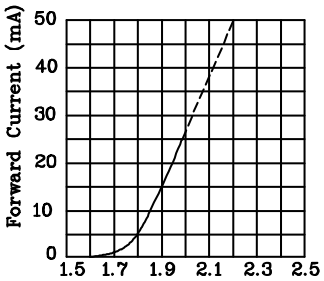

FORWARD CURRENT Vs.
FORWARD VOLTAGE

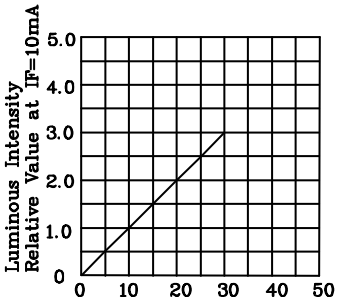

LUMINOUS INTENSITY Vs.
FORWARD CURRENT

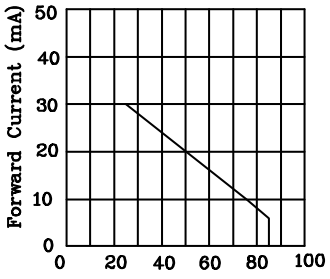

FORWARD CURRENT
DERATING CURVE

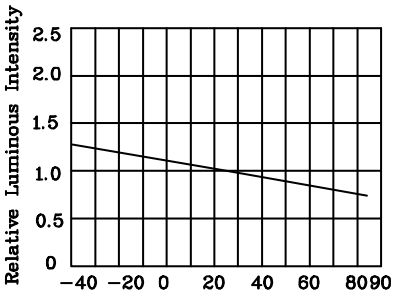

LUMINOUS INTENSITY Vs.
AMBIENT TEMPERATURE

Reflow Soldering Profile For Lead-free SMT Process.

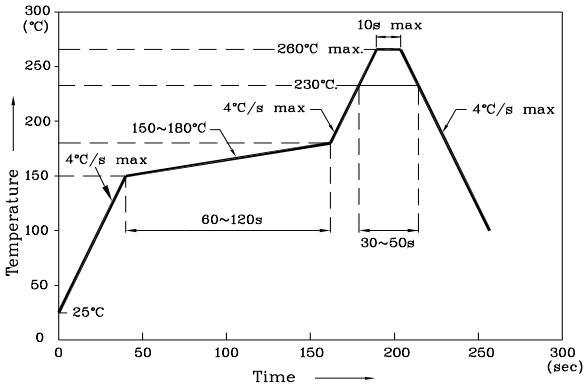

Notes:
1. Maximum soldering temperature should not exceed 260℃.
2. Recommended reflow temperature: 145℃-260℃.
3. Do not put stress to the epoxy resin during high temperatures conditions.

❖ Recommended Soldering Pattern (Units : mm;Tolerance:± 0.15)

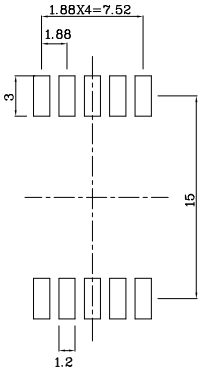

❖ Tape Specification (Units : mm)

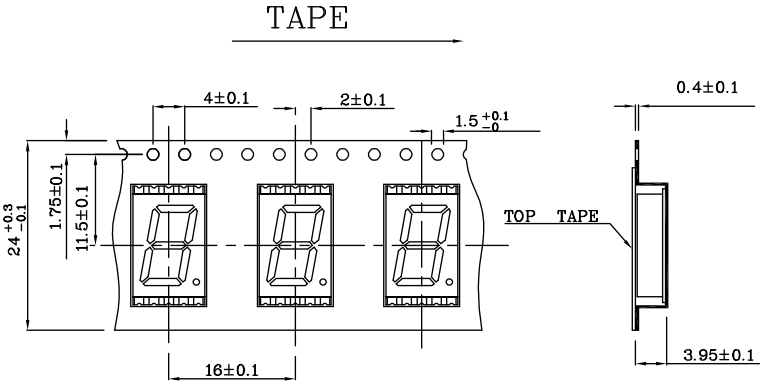

Remarks:

If special sorting is required (e.g. binning based on forward voltage, luminous intensity, or wavelength), the typical accuracy of the sorting process is as follows:

1. Wavelength: +/-1nm
2. Luminous Intensity: +/-15%
3. Forward Voltage: +/-0.1V

Note: Accuracy may depend on the sorting parameters.