SunLED
www.SunLED.com

Part Number: **XZBG67W**

4.0x4.0mm RIGHT ANGLED SURFACE MOUNT LED LAMP

Features

- SINGLE COLOR.
- SUITABLE FOR ALL SMT ASSEMBLY AND SOLDER PROCESS.
- AVAILABLE ON TAPE AND REEL.
- IDEAL FOR BACKLIGHTING.
- ELECTROSTATIC DISCHARGE CLASSIFICATION: CLASS 1/HBM (MIL-STD-883METHOD3015.7).
- PACKAGE : 500PCS / REEL.
- RoHS COMPLIANT.

ATTENTION
OBSERVE PRECAUTIONS FOR HANDLING ELECTROSTATIC DISCHARGE SENSITIVE DEVICES

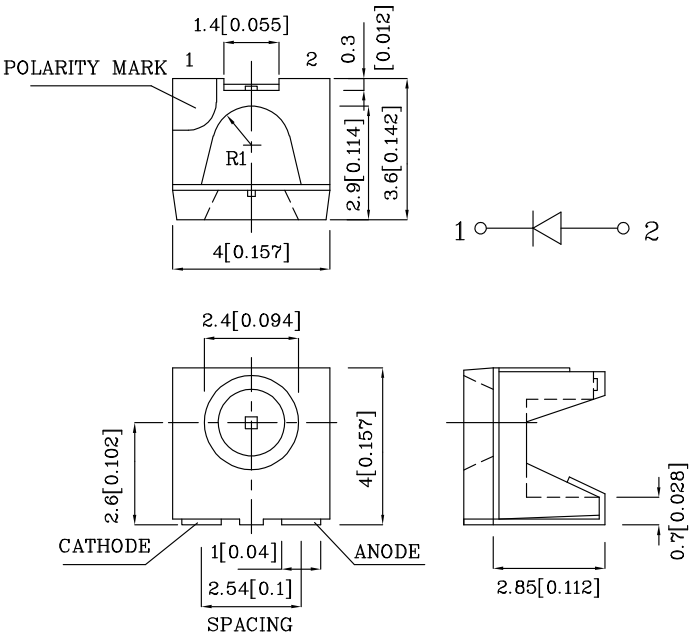

Notes:

1. All dimensions are in millimeters (inches).
2. Tolerance is ± 0.25(0.01") unless otherwise noted.

Absolute Maximum Ratings (T_A=25°C)		**BG (InGaN)**	**Unit**
Reverse Voltage	V_R	5	V
Forward Current	I_F	30	mA
Forward Current (peak) 1/10 Duty Cycle 0.1ms Pulse Width	i_{FS}	150	mA
Power Dissipation	P_T	105	mW
Operating Temperature	T_A	-40 ~ +85	°C
Storage Temperature	Tstg	-40 ~ +85	

Operating Characteristics (T_A=25°C)		**BG (InGaN)**	**Unit**
Forward Voltage (typ.) (I_F=20mA)	V_F	3.5	V
Forward Voltage (max.) (I_F=20mA)	V_F	4.5	V
Reverse Current (V_R=5V)	I_R	10	uA
Wavelength of Peak Emission (I_F=20mA)	λ P	520	nm
Wavelength of Dominant Emission (I_F=20mA)	λ D	525	nm
Spectral Line Full Width At Half-Maximum (I_F=20mA)	Δλ	38	nm
Capacitance (V_F=0V, f=1MHz)	C	45	pF

Part Number	Emitting Color	Emitting Material	Lens-color	Luminous Intensity (IF=20mA) mcd		Wavelength nm λ P	Viewing Angle 2 θ 1/2
				min.	typ.		
XZBG67W	Green	InGaN	Water Clear	70	198	520	90°

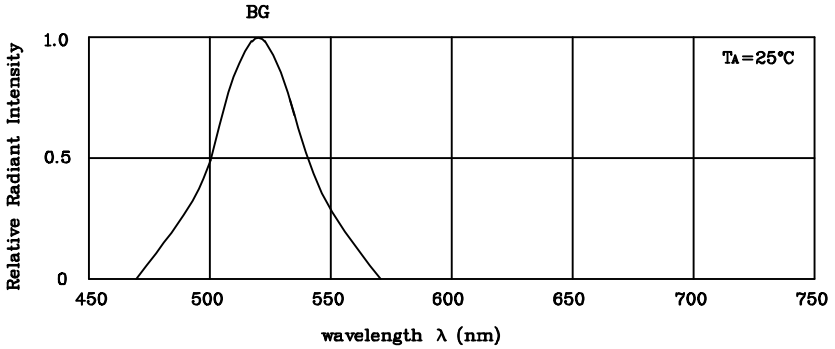

RELATIVE INTENSITY Vs. WAVELENGTH

❖ BG

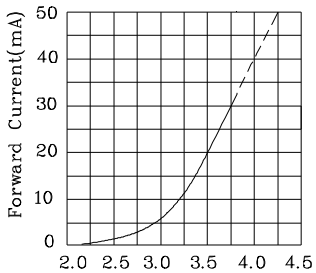

FORWARD CURRENT Vs. FORWARD VOLTAGE

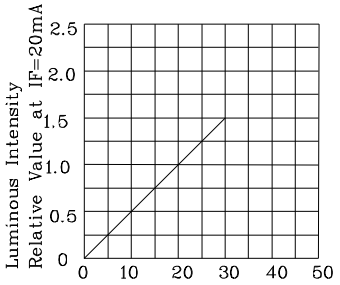

LUMINOUS INTENSITY Vs. FORWARD CURRENT

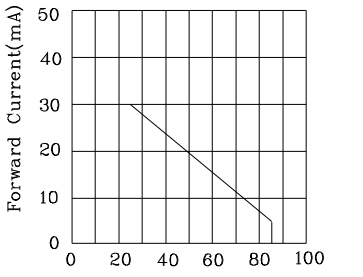

FORWARD CURRENT DERATING CURVE

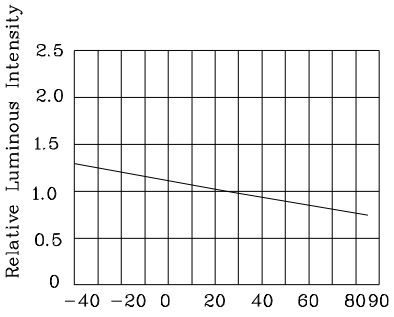

LUMINOUS INTENSITY Vs. AMBIENT TEMPERATURE

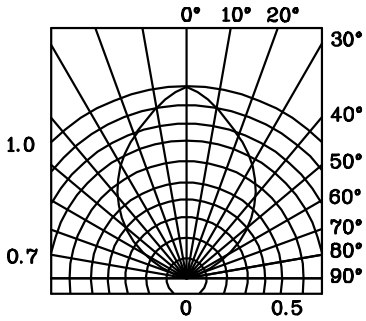

SPATIAL DISTRIBUTION

Reflow Soldering Profile For Lead-free SMT Process.

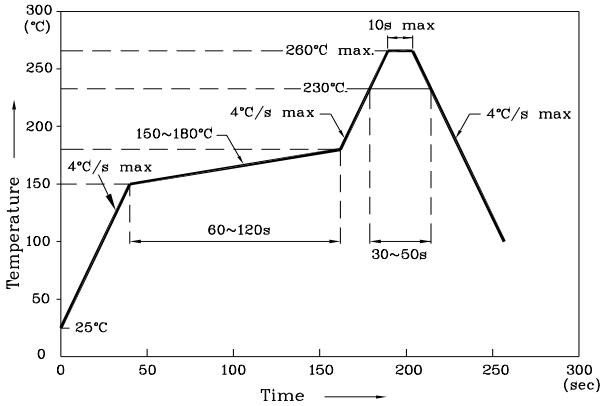

Notes:
1. Maximum soldering temperature should not exceed 260℃.
2. Recommended reflow temperature: 145℃-260℃.
3. Do not put stress to the epoxy resin during high temperatures conditions.

❖ Recommended Soldering Pattern (Units : mm;Tolerance:± 0.1)

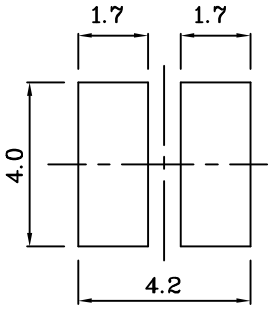

❖ Tape Specification (Units : mm)

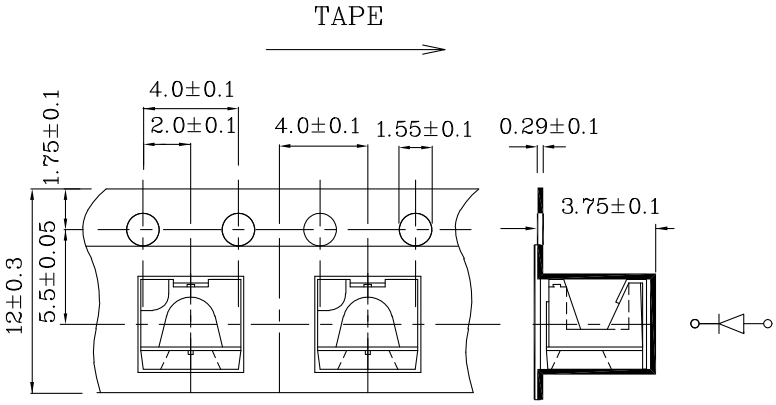

Remarks:

If special sorting is required (e.g. binning based on forward voltage, luminous intensity, or wavelength), the typical accuracy of the sorting process is as follows:

1. Wavelength: +/-1nm
2. Luminous Intensity: +/-15%
3. Forward Voltage: +/-0.1V

Note: Accuracy may depend on the sorting parameters.