SunLED
www.SunLED.com

Part Number: **XNG4ZMR46D**

SUBMINIATURE SOLID STATE LAMP

Features

- BLACK CASE ENHANCES CONTRAST.
- VIBRATION AND SHOCK RESISTANT.
- AVAILABLE WITH A VARITY OF LEDs.
- UL RATING : 94V-0.
- HOUSING MATERIAL: TYPE 66 NYLON.
- RoHS COMPLIANT.

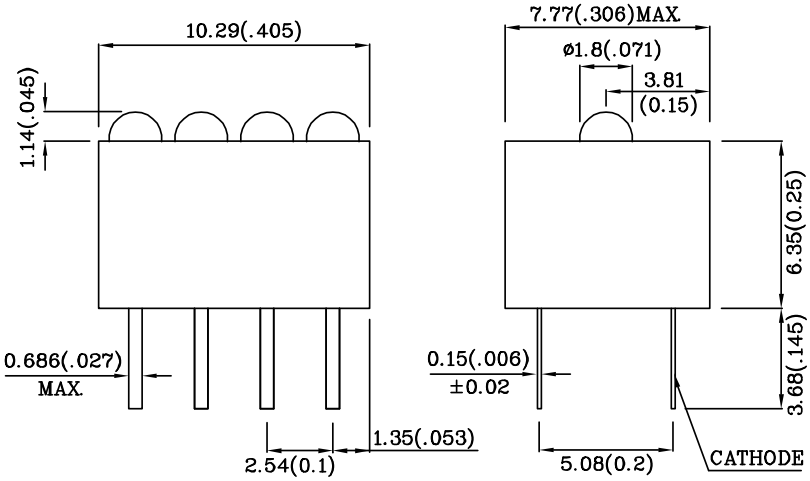

Notes:

1. All dimensions are in millimeters (inches).
2. Tolerance is ± 0.25(0.01") unless otherwise noted.

Absolute maximum ratings (T_A=25°C)		**MR (GaAlAs)**	**Unit**
Reverse Voltage	V_R	5	V
Forward Current	I_F	30	mA
Forward Current (peak) 1/10 Duty Cycle 0.1ms Pulse Width	i_{FS}	155	mA
Power Dissipation	P_T	100	mW
Operating Temperature	T_A	-40 ~ +85	°C
Storage Temperature	Tstg	-40 ~ +85	
Lead Solder Temperature [2mm below package base]	260°C For 3 Seconds		
Lead Solder Temperature [5mm below package base]	260°C For 5 Seconds		

Operating Characteristics (T_A=25°C)		**MR (GaAlAs)**	**Unit**
Forward Voltage (Typ.) (I_F=20mA)	V_F	1.85	V
Forward Voltage (Max.) (I_F=20mA)	V_F	2.5	V
Reverse Current (V_R=5V)	I_R	10	uA
Wavelength of Peak Emission (I_F=20mA)	λ p	660	nm
Wavelength of Dominant Emission (I_F=20mA)	λ D	640	nm
Spectral Line Full Width At Half-Maximum (I_F=20mA)	Δλ	20	nm
Capacitance (V_F=0V, f=1MHz)	C	45	pF

Part Number	Emitting Color	Emitting Material	Lens-color	Luminous Intensity (IF=20mA) mcd		Wavelength nm λ P	Viewing Angle 2 θ 1/2
				min.	typ.		
XNG4ZMR46D	Red	GaAlAs	Red Diffused	50	148	660	40°

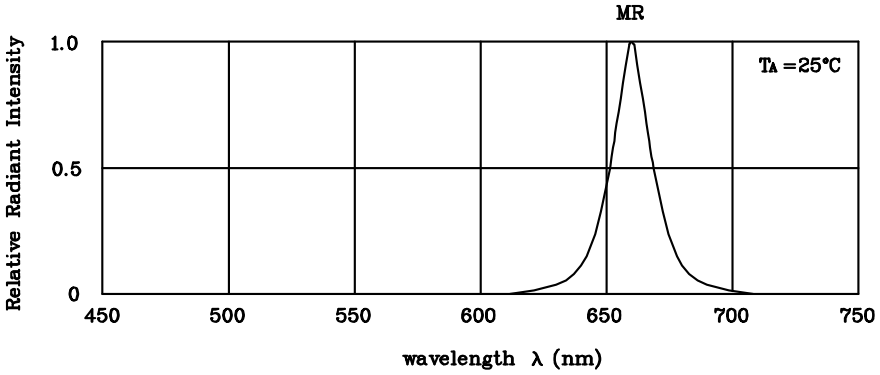

RELATIVE INTENSITY Vs. WAVELENGTH

❖ MR

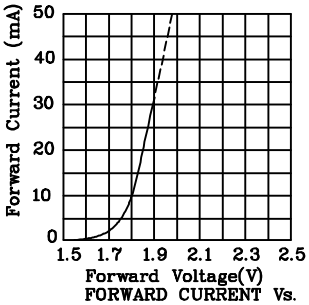

FORWARD CURRENT Vs. FORWARD VOLTAGE

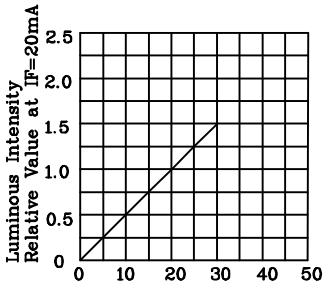

LUMINOUS INTENSITY Vs. FORWARD CURRENT

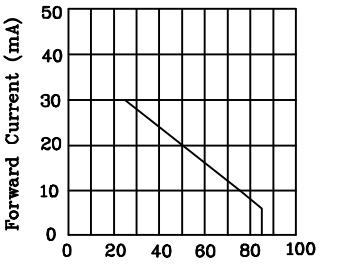

FORWARD CURRENT DERATING CURVE

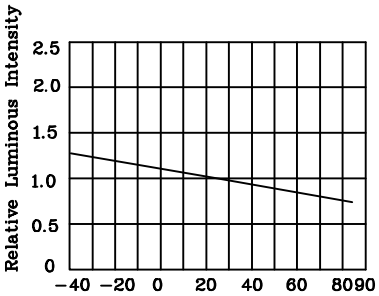

LUMINOUS INTENSITY Vs. AMBIENT TEMPERATURE

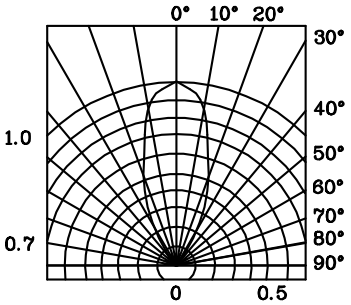

SPATIAL DISTRIBUTION

Wave Soldering Profile For Lead-free Through-hole LED.

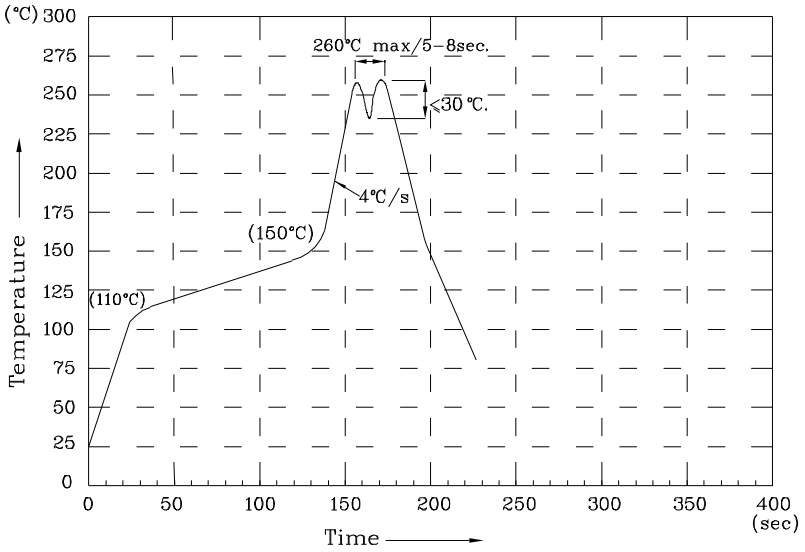

NOTES:

1. Recommend the wave temperature 245℃~260℃. The maximum soldering temperature should be less than 260℃.
2. Do not apply stress on epoxy resins when temperature is over 85 degree℃.
3. The soldering profile apply to the lead free soldering (Sn/Cu/Ag alloy).
4. No more than once.

Remarks:

If special sorting is required (e.g. binning based on forward voltage, luminous intensity, or wavelength), the typical accuracy of the sorting process is as follows:

1. Wavelength: +/-1nm
2. Luminous Intensity: +/-15%
3. Forward Voltage: +/-0.1V

Note: Accuracy may depend on the sorting parameters.