SunLED
www.SunLED.com

Part Number: **XLUGY81M**

8mm BI-COLOR INDICATOR LAMP

Features

- UNIFORM LIGHT OUTPUT.
- LOW POWER CONSUMPTION.
- MILKY WHITE DIFFUSION LENS.
- 3 LEADS WITH ONE COMMON LEAD.
- I.C. COMPATIBLE.
- LONG LIFE - SOLID STATE RELIABILITY.
- RoHS COMPLIANT.

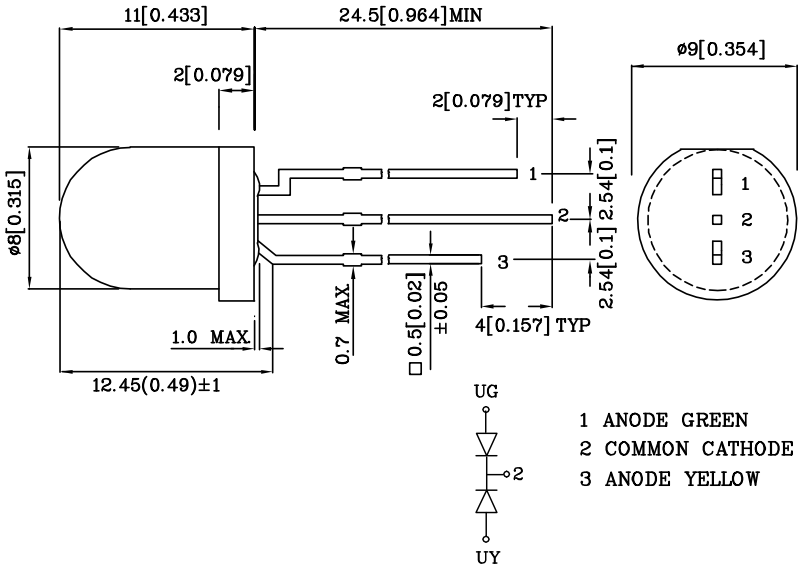

Notes:

1. All dimensions are in millimeters (inches).
2. Tolerance is ± 0.25(0.01") unless otherwise noted.

Absolute maximum ratings (T_A=25°C)		**UG (GaP)**	**UY (GaAsP/ GaP)**	**Unit**
Reverse Voltage	V_R	5	5	V
Forward Current	I_F	25	30	mA
Forward Current (Peak) 1/10 Duty Cycle 0.1ms Pulse Width	i_{FS}	140	140	mA
Power Dissipation	P_T	105	105	mW
Operating Temperature	T_A	-40 ~ +85		°C
Storage Temperature	Tstg	-40 ~ +85		
Lead Solder Temperature [2mm Below Package Base]	260°C For 3 Seconds			
Lead Solder Temperature [5mm Below Package Base]	260°C For 5 Seconds			

Operating Characteristics (T_A=25°C)		**UG (GaP)**	**UY (GaAsP /GaP)**	**Unit**
Forward Voltage (Typ.) (I_F=20mA)	V_F	2.2	2.1	V
Forward Voltage (Max.) (I_F=20mA)	V_F	2.5	2.5	V
Reverse Current (V_R=5V)	I_R	10	10	uA
Wavelength of Peak Emission (I_F=20mA)	λ P	565	590	nm
Wavelength of Dominant Emission (I_F=20mA)	λ D	568	588	nm
Spectral Line Full Width At Half-Maximum (I_F=20mA)	Δλ	30	35	nm
Capacitance (V_F=0V, f=1MHz)	C	15	20	pF

Part Number	Emitting Color	Emitting Material	Lens-color	Luminous Intensity (IF=20mA) mcd min.	Luminous Intensity (IF=20mA) mcd typ.	Wavelength nm λ P	Viewing Angle 2 θ 1/2
XLUGY81M	Green	GaP	White Diffused	18	49	565	50°
	Yellow	GaAsP/GaP		10	29	590	

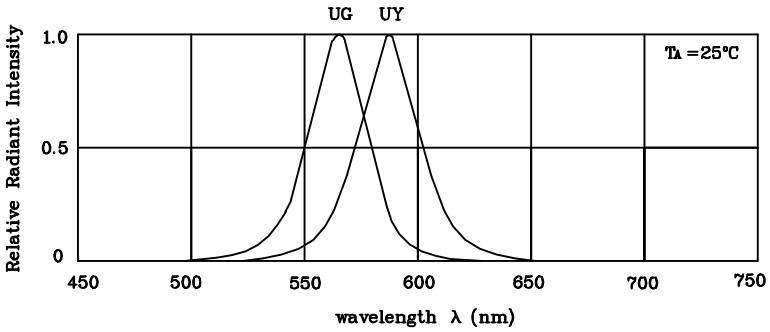

RELATIVE INTENSITY Vs. WAVELENGTH

❖ UG

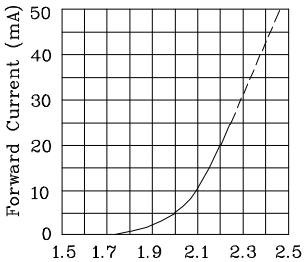

FORWARD CURRENT Vs.
FORWARD VOLTAGE

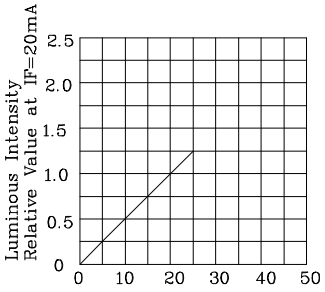

LUMINOUS INTENSITY Vs.
FORWARD CURRENT

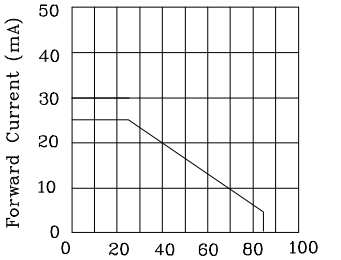

FORWARD CURRENT
DERATING CURVE

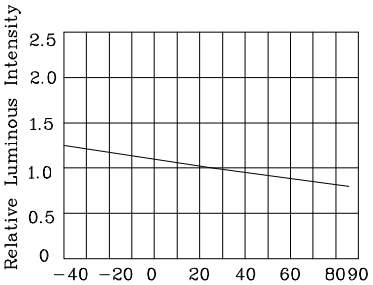

LUMINOUS INTENSITY Vs.
AMBIENT TEMPERATURE

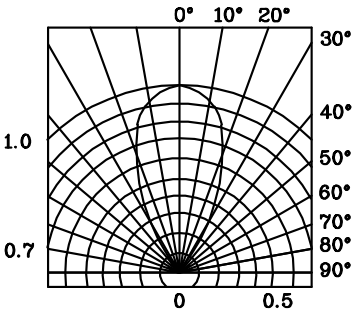

SPATIAL DISTRIBUTION

❖ **UY**

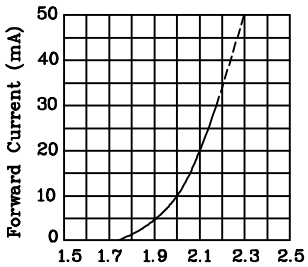

FORWARD CURRENT Vs.
FORWARD VOLTAGE

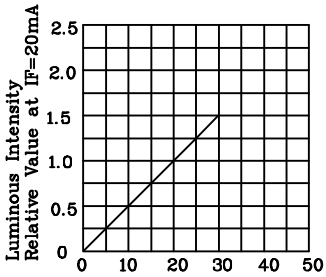

LUMINOUS INTENSITY Vs.
FORWARD CURRENT

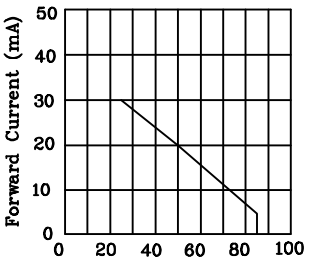

FORWARD CURRENT
DERATING CURVE

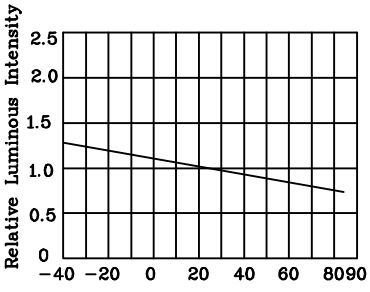

LUMINOUS INTENSITY Vs.
AMBIENT TEMPERATURE

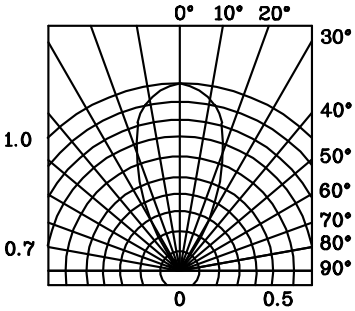

SPATIAL DISTRIBUTION

Wave Soldering Profile For Lead-free Through-hole LED.

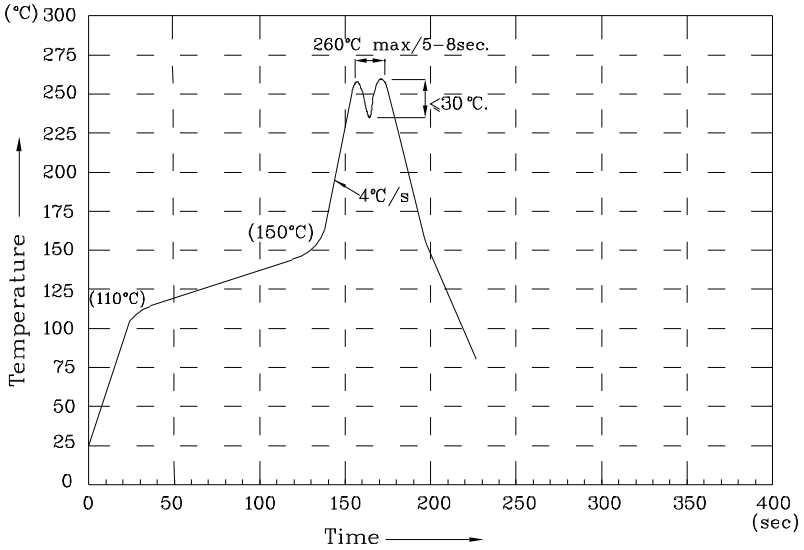

NOTES:

1. Recommend the wave temperature 245℃~260℃. The maximum soldering temperature should be less than 260℃.
2. Do not apply stress on epoxy resins when temperature is over 85 degree℃.
3. The soldering profile apply to the lead free soldering (Sn/Cu/Ag alloy).
4. No more than once.

Remarks:

If special sorting is required (e.g. binning based on forward voltage, luminous intensity, or wavelength), the typical accuracy of the sorting process is as follows:

1. Wavelength: +/-1nm
2. Luminous Intensity: +/-15%
3. Forward Voltage: +/-0.1V

Note: Accuracy may depend on the sorting parameters.