KEMET Part Number: T520B157M006ATE070

T520, Tantalum, Polymer Tantalum, 150 uF, 20%, 6.3 VDC, SMD, Polymer, Molded, Low ESR, Non-Combustible, 70 mOhms, 3528, Height Max = 2mm

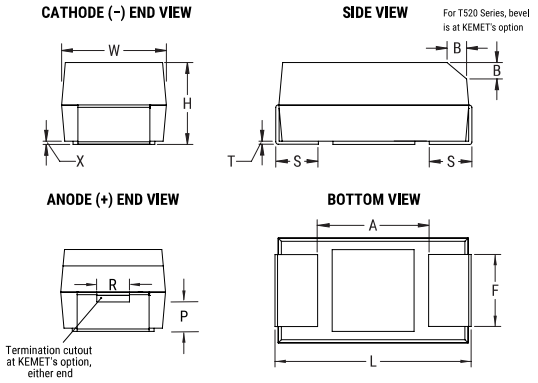

General Information	
Series:	T520
Dielectric:	Polymer Tantalum
Style:	SMD Chip
Description:	SMD, Polymer, Molded, Low ESR, Non-Combustible
Features:	Low ESR
RoHS:	Yes
Termination:	Tin
AEC-Q200:	No
Component Weight:	94.85 mg
Shelf Life:	52 Weeks
MSL:	3

Dimensions	
Footprint	3528
L	3.5mm +/-0.2mm
W	2.8mm +/-0.2mm
H	1.9mm +/-0.1mm
T	0.13mm REF
S	0.8mm +/-0.3mm
F	2.2mm +/-0.1mm
A	1.9mm MIN
B	0.4mm +/-0.15mm
P	0.5mm REF
R	1mm REF
X	0.1mm +/-0.1mm

Specifications	
Capacitance:	150 uF
Capacitance Tolerance:	20%
Voltage DC:	6.3 VDC (105C)
Temperature Range:	-55/+105°C
Rated Temperature:	105°C
Life:	2000 Hrs (105C)
Humidity:	60C, 90% RH, 500 Hours, No Load
Dissipation Factor:	8% 120Hz 25C
Failure Rate:	N/A
Resistance:	70 mOhms (100kHz 25C)
Ripple Current:	1300 mA (rms, 100kHz 45C), 910 mA (rms, 85C), 325 mA (rms, 105C)
Leakage Current:	94.5 uA (5min 25°C)

Packaging Specifications	
Packaging:	T&R, 178mm
Packaging Quantity:	2000

Statements of suitability for certain applications are based on our knowledge of typical operating conditions for such applications, but are not intended to constitute - and we specifically disclaim - any warranty concerning suitability for a specific customer application or use. This Information is intended for use only by customers who have the requisite experience and capability to determine the correct products for their application. Any technical advice inferred from this Information or otherwise provided by us with reference to the use of our products is given gratis, and we assume no obligation or liability for the advice given or results obtained.

© 2006 - 2022 KEMET