KEMET Part Number: T322B105K050AT

T322, Tantalum, MnO2 Tantalum, Commercial Grade, 1 uF, 10%, 50 VDC, 8 Ohms

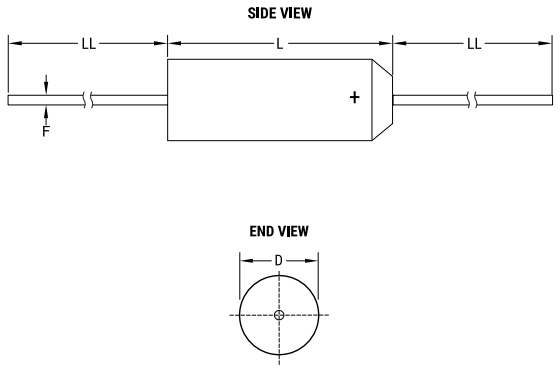

General Information	
Series:	T322
Dielectric:	MnO2 Tantalum
Style:	Axial
Description:	Axial, Solid Tantalum, Molded, Military (Non-ER), Low ESR
Features:	Low ESR
RoHS:	Yes
Termination:	Tin
Lead:	Wire Leads
AEC-Q200:	No
Notes:	Uninsulated.
Shelf Life:	156 Weeks

Dimensions	
D	2.79mm MAX
L	7.37mm MAX
LL	25.4mm MIN
F	0.51mm +/-0.05mm

Packaging Specifications	
Packaging:	Bulk, Bag
Packaging Quantity:	250

Specifications	
Capacitance:	1 uF
Capacitance Tolerance:	10%
Voltage DC:	50 VDC (85C), 33.35 VDC (125C Surge), 0.5 VDC (125C Reverse)
Temperature Range:	-55/+125°C
Rated Temperature:	85°C
Dissipation Factor:	3%
Resistance:	8 Ohms (100kHz)
Leakage Current:	0.5 uA (25°C)

Statements of suitability for certain applications are based on our knowledge of typical operating conditions for such applications, but are not intended to constitute - and we specifically disclaim - any warranty concerning suitability for a specific customer application or use. This Information is intended for use only by customers who have the requisite experience and capability to determine the correct products for their application. Any technical advice inferred from this Information or otherwise provided by us with reference to the use of our products is given gratis, and we assume no obligation or liability for the advice given or results obtained.

© 2006 - 2022 KEMET