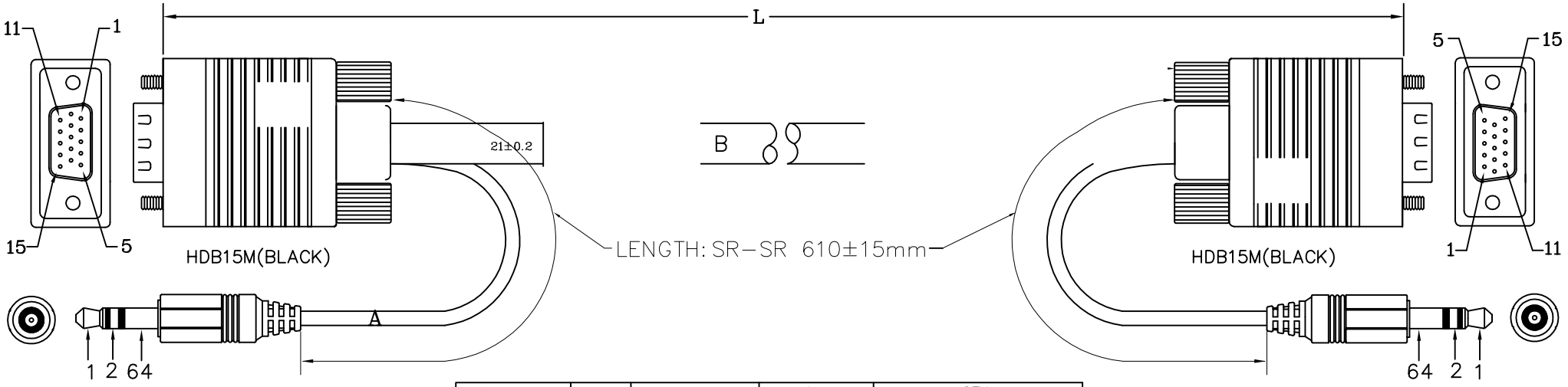

ø3.5 STEREO PLUG(P1)
(MOLDING BLACK COLOR)

ø3.5 STEREO PLUG(P2)
(MOLDING BLACK COLOR)

ITEM NO	COLOR	LENGTH	1PCS/PE BAG	CTN
SVST-3MM	BLACK	915±20mm	08*6"*11"	80PC/CTN(46*/30*25CM)
SVST-10MM	BLACK	3050±50mm	08*7"*12"	30PC/CTN(46*/30*25CM)
SVST-25MM	BLACK	7650±60mm	08*9"*14"	80PC/CTN(46*/30*25CM)
SVST-50MM	BLACK	15250±100mm	08*14"*16"	20PC/CTN(46*/30*25CM)
SVST-75MM	BLACK	22875±100mm	08*18"*20"	xPC/CTN(46*/30*25CM)
SVST-100MM	BLACK	30500±100mm	08*18"*20"	xPC/CTN(46*/30*25CM)

NOTE:

1. CABLE; (A)28AWG(7/0.12TC),NON-UI,NON-FOIL,2C+S,OD=3.0±0.2mm,BLACK COLOR,PVC JACKET.
   (B)28AWG(7/0.12TC),UL2919,AL+D+B,{[(28AWG*1C+D+AL)*3COAX+28AWG*5.5PAIR]},OD=9.0±0.2mm.BLACK WITH EMBOSS,PVC JACKET.
2. LENGTH: L.
3. CONNECTORS: HDB15M*2PCS(BLACK INSULATOR),ø3.5 STEREO PLUG*2PCS(三段式)(SHELL NICKEL).
4. MOLD: MOLDING TYPE.
5. SCREW:四方模螺絲*4PCS.
6. CONTACTS:

HDB15P	1	6	2	7	3	8	4	14	5	12	10	13	11	15	9	64	
HDB15P	1	6	2	7	3	8	4	14	5	12	10	13	11	15	9	64	
	RC	RG	BC	BG	GC	GG	PAIR		PAIR		PAIR		PAIR			SHELL	

ø3.5 STEREO PLUG(P1)	1	2	64
ø3.5 STEREO PLUG(P2)	1	2	64
	PAIR		SHELL

7. Test machine test condition.
   A.100% OPEN,SHORT&INTERMITANCE TEST.
   B.CONDUCTOR RESISTANCE: 3ohms MAX:
   C.INSULATION RESISTANCE: 5M Min/,10ms:
8. ALL MUST BE MEET ON ROHS COMPLIANT.

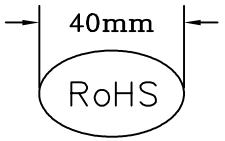

Printing CTN(BLUE)

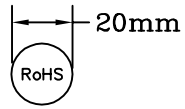

Printing PE BAG
(COLOR: BLACK)

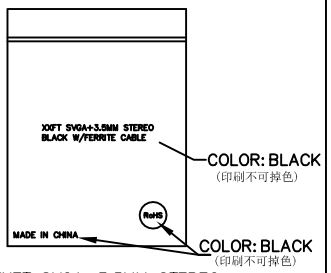

XXFT SVGA+3.5MM STEREO
BLACK W/FERRITE CABLE
1PCS/PE BAG

COMPANY	MRP		ITEM NO.	SVST-3MM	NO	B
REVISION	DATE	DISCRIPTION	DRAWN BY		SPEC	Stellar Labs Computer +
REV.A/0	2015.04.14		DESIGNED BY			
			APPROVAL			

SCALE	
UNIT(mm)	
PAGE	1/1