Art.-Number: 701119

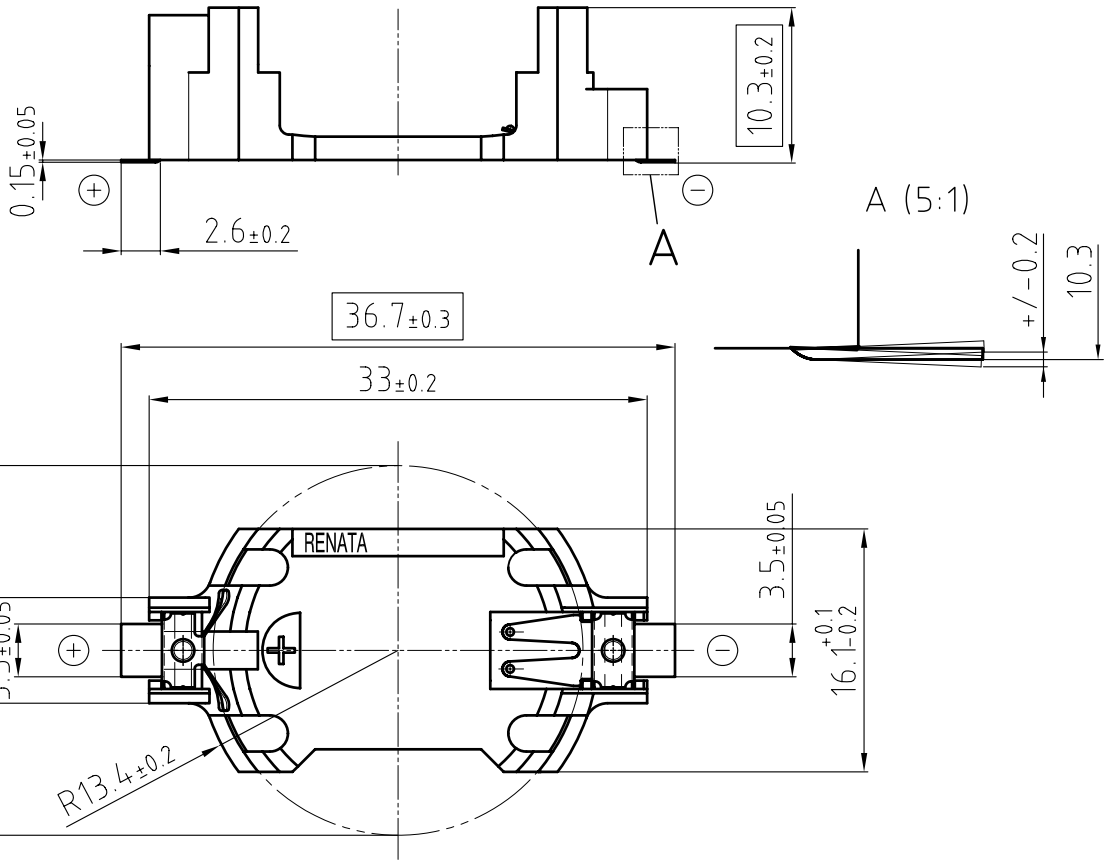

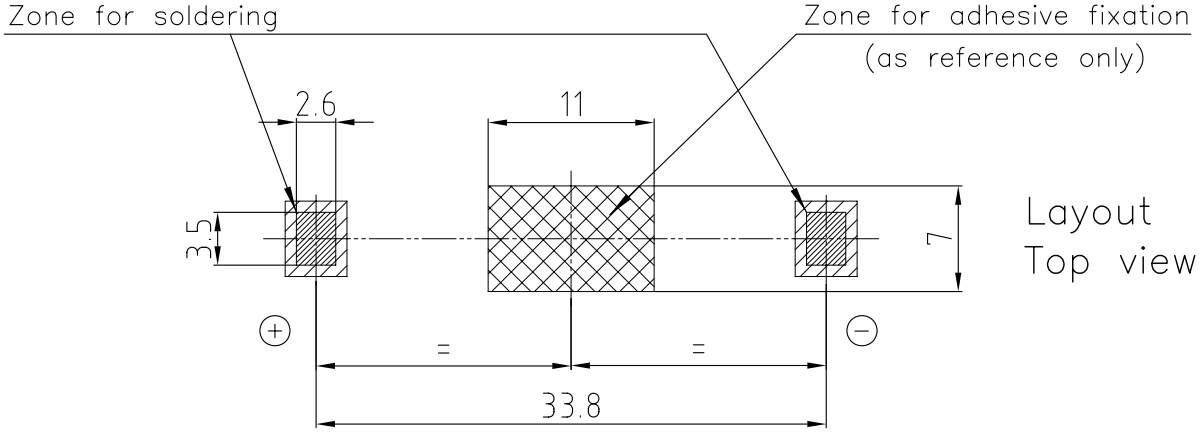

- Samples can deviate in the execution from the serie.

- Dimensions and tolerances can be specified only after the testing of the devices for the mass production definitely

Holder material : heat resistant, glass-fiber reinforced LCP

Battery contacts : spring stainless steel 301 nickel plated throughout

Solder contacts : spring stainless steel 301 solder area tin-plated throughout, min. thickness 5µm

All framed values will be used for dimension checking !

Rev.	1	07.09.07	MCi	Rev.	4	30.10.17	PWu
Rev.	2	24.10.07	SRi	Rev.	○		
Rev.	3	15.09.10	PWu	Rev.	○		

Customer's Approval		
Date		
Signature		

Titel: SMTU2477N-LF	Scale 2:1	Drawn	25.01.05	SRi
		Checked	01.11.17	MDi
		Approved		

renata batteries

CH-4452 Itingen
Switzerland

3.8763.4-4