Features

- 2 x 2 Industry Standard Package
- 95–145 Volts AC Operation
- 1 to 1023 Seconds Timing Range
- ±0.1% Repeat Accuracy
- Transient Protected
- .250" Quick Connect Terminals
- Encapsulated Construction

OPERATION

DELAY ON OPERATE– The delay period begins when input voltage is applied. At the end of the delay period, the relay will operate and will not release until input voltage is removed. Reset occurs when input voltage is reapplied.

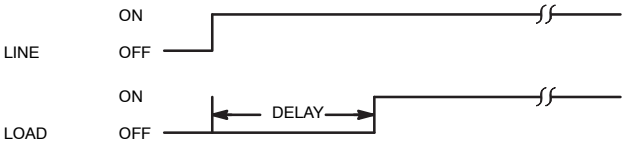

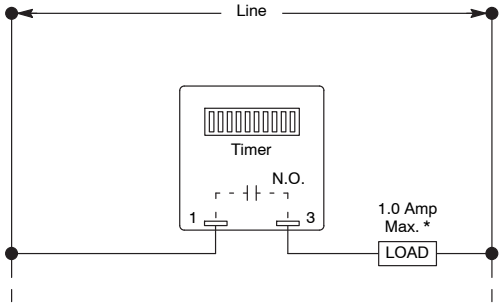

* For higher current applications connect a switching relay in series with timer in place of load.

RLY230

Binary Switch, Programmable, AC, Delay on Operate, Solid State, Universal Cube Timer.

D68

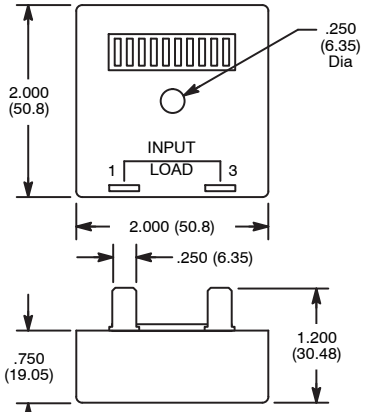

Delay Setting

Combine "ON" switches to set time delay

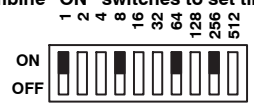

Ex. 329 Seconds.

Ratings and Specifications

Operating Voltage Range (Line): 95–145 V AC (50/60Hz)
Switch Configuration: Solid State, SPST
Switching Current (Load): 20mA Amp min., 1 Amp max.
Timing Adjustment Range: 1 to 1023 seconds
Repeat Accuracy: ±0.1%
Reset Time: 50ms Max.
Expected Life (Electrical): 100,000,000 operations @ rated load
Operating Temperature: –20° to +80°C
Storage Temperature: –30° to +85°C
Dielectric Breakdown Voltage Between All Elements: 1500V_{rms}
Transient Protection: 1500 V for 150µs
Mounting: One #8 or #10 Screw