onlinecomponents.com
THE ONLINE DISTRIBUTOR OF ELECTRONIC COMPONENTS

LTR	REVISION	DATE	APPD
H		02–09–07	GP

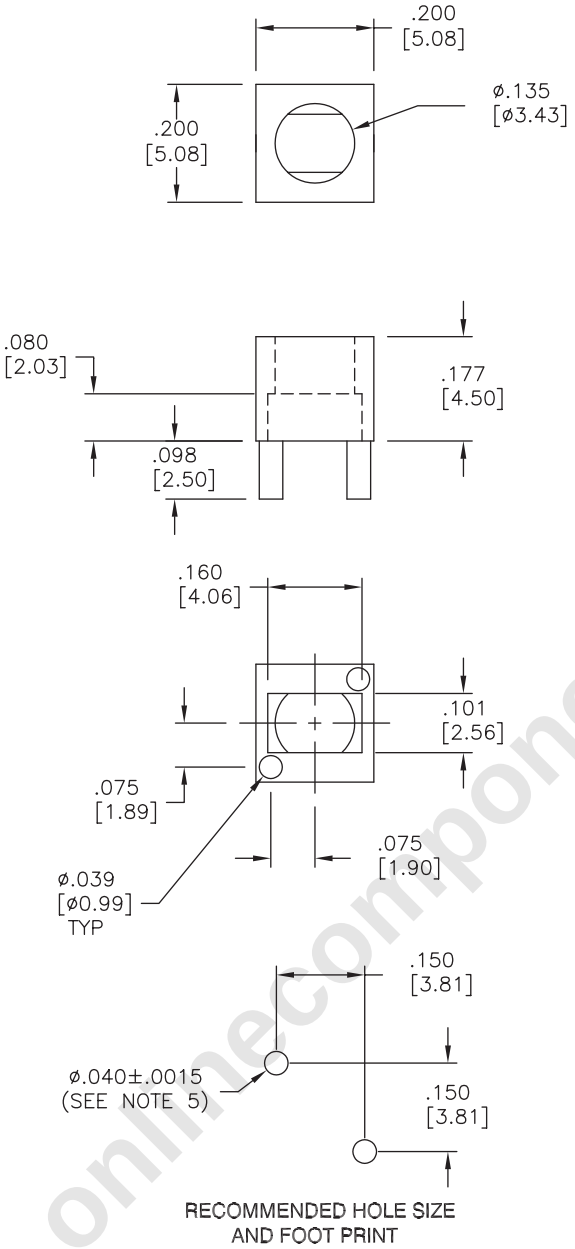

RECOMMENDED HOLE SIZE
AND FOOT PRINT

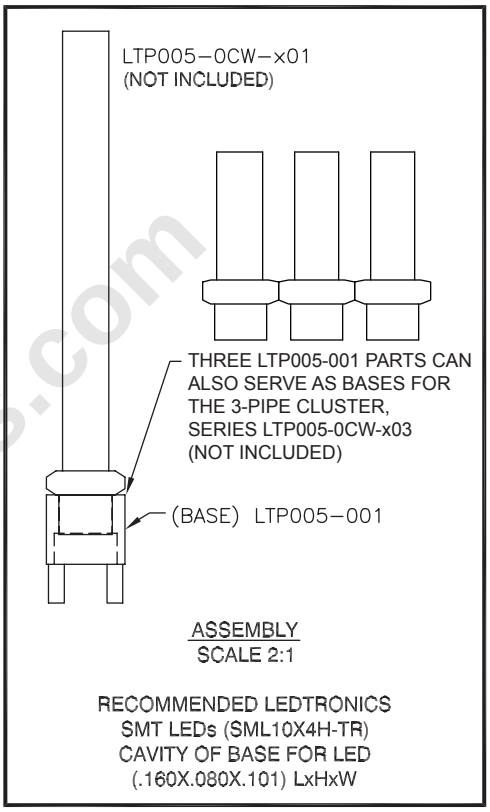

RoHS
COMPLIANT
2002/95/EC

NOTES:

1. MATERIAL: POLYCARBONATE
2. COLOR: BLACK

LEDTRONICS, INC.®
23105 KASHIWA COURT
TORRANCE, CA 90505

-PROPRIETARY-
This document contains Proprietary Information of LEDTRONICS, INC. It may not be copied, used or disclosed for any purpose without the prior express written consent of LEDTRONICS, INC.

.XXX ± .003
.XX ± .010
ANGLES ± 0°,30'
FRACT. ± 1/32
TOLERANCE PER ANSI–Y14.5 (UNLESS OTHERWISE STATED)
ALL DIMENSIONS IN INCHES [mm].

TITLE					
(BASE) LTP005-001					
DWG NO	SCALE	SHEET	DATE		
CMMS0165	3:1	1 OF 1	08–02–00		
CODE IDENT NO.	DWG BY	CHK BY	QA	MFG	CUSTOMER
8Z410	RM	PL 02–09–07			