Thomas&Betts

SPECIFICATION SHEET
CONNECTORS FOR LIQUIDTIGHT FLEXIBLE NONMETALLIC CONDUIT AND TUBING

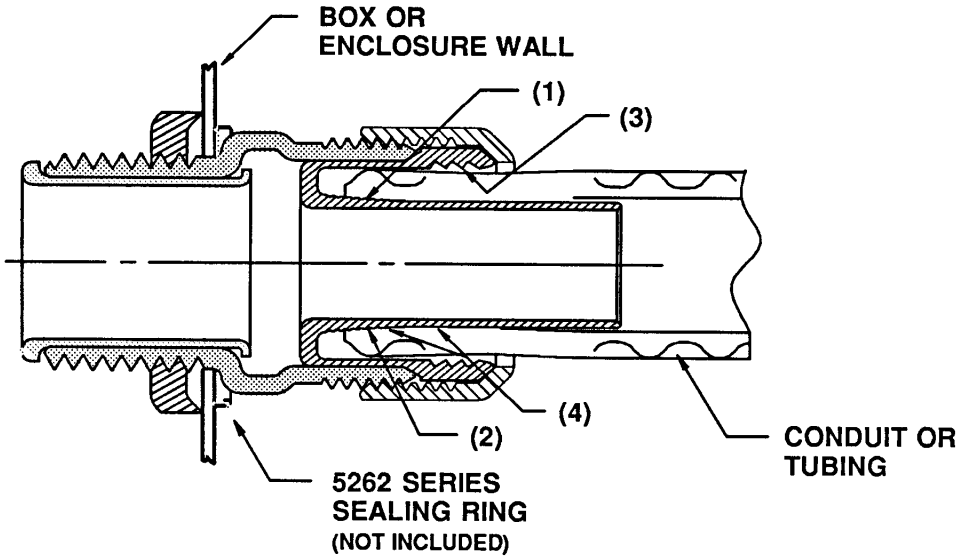

APPLICATION:

A series of metallic connectors designed to provide a liquidtight seal when terminating liquidtight nonmetallic conduit (U.L. Type B) or liquidtight nonmetallic tubing to a box or enclosure with knockout opening or a threaded hub. For knockout applications use 5262 Series sealing rings.

STANDARD MATERIAL/FINISH:

Body, Gland and Locknut - Steel/Malleable Iron
Electro-zinc plated

Insert - Nylon

CONFORMS TO:

- C.S.A. 22.2 #227.2 & C.S.A 22.2 #227.3
- ANSI/UL514B-1988
- Watertight requirements of NEMA Type 4 and NEMA Type 6 enclosures with conduit and NEMA Type 4 enclosures with tubing
- Federal Standard H28 (NPT threads)
- Meets J.I.C. EGP-1 standard
- Suitable for hazardous locations Class I Div. 2; Class II Div. 1 & 2; Groups E,F & G; Class III per N.E.C. Article 501-4, 502-4 and 503-3.

FEATURES:

- Connector assembles to conduit without disassembly and is designed to be installed with a positive installation criteria (gland bottoms).
- Connector ferrule designed to accept variations in conduit inside diameter and is tolerant of field conduit cuts (1).
- The profile of ferrule is designed to reduce friction between conduit I.D. and ferrule (2) allowing conduit to seat properly for an effective seal.
- The inner surface of the clamping fingers is designed with conduit biting teeth to enhance clamping and sealing action (3).
- Provides a double sealing action (4).
- Performance of connectors tested to simulate adverse installation conditions.
- Insulated throat.