MICRO SWITCH
A DIVISION OF MINNEAPOLIS-HONEYWELL REGULATOR COMPANY
FREEPORT, ILLINOIS
FED. MFR. CODE 91929

ACTUATOR — SWITCH

CATALOG LISTING
JV—91

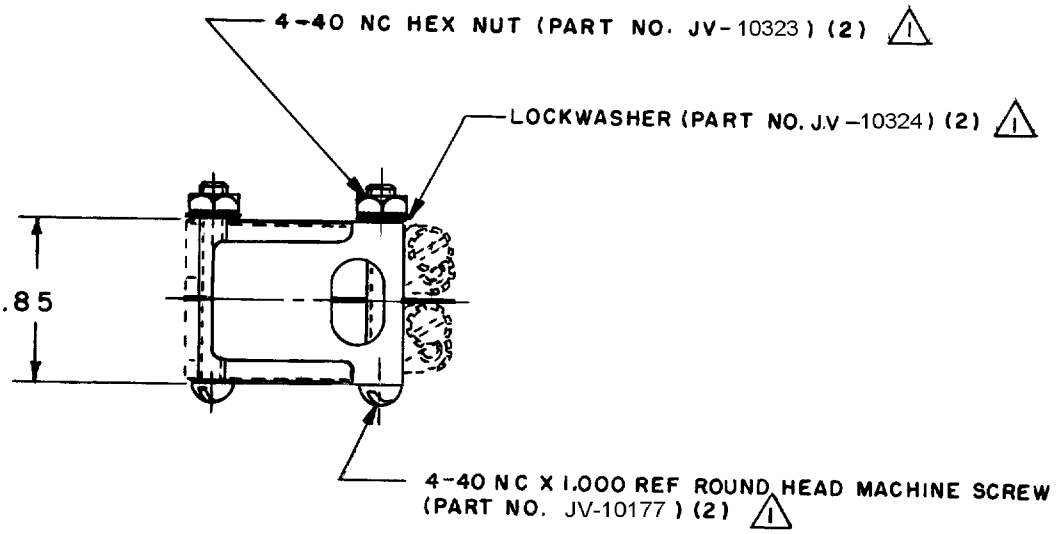

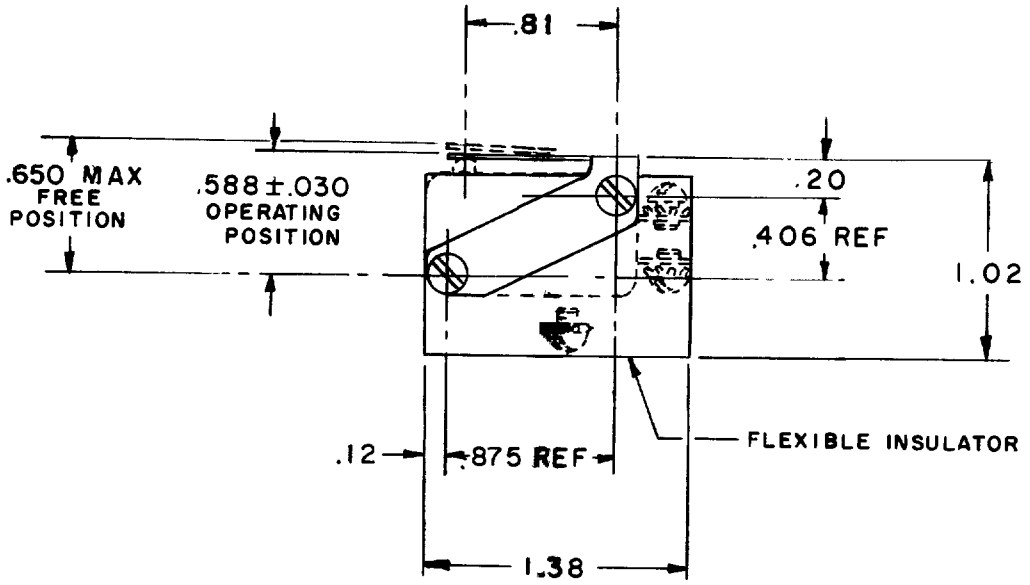

NOTE—
1 - FURNISHED UNASSEMBLED
2 - SWITCHES DO NOT NECESSARILY OPERATE SIMULTANEOUSLY

THIS DRAWING COVERS A PROPRIETARY ITEM AND IS THE PROPERTY OF MICRO SWITCH, A DIVISION OF MINNEAPOLIS-HONEYWELL REGULATOR CO. THIS DRAWING IS NOT TO BE COPIED OR USED WITHOUT THE APPROVAL OF MICRO SWITCH.

CHARACTERISTICS WITH (2) V3-1 BASIC SWITCH INSTALLED

OPERATING FORCE — — — —28 OZ MAX

RELEASE FORCE — — — — —10 OZ MIN

OVERTRAVEL — — — — — —.035 MIN

ELECTRICAL DATA

CONTACT ARRANGEMENT	BREAK DISTANCE

SCALE FULL
DO NOT SCALE PRINT

UNLESS OTHERWISE SPECIFIED
DIMENSIONS ARE IN INCHES
TOLERANCES ARE:

ONE PLACE	(.0)	±.030
TWO PLACE	(.00)	±.015
THREE PLACE	(.000)	±.005
ANGLES		±

WEIGHT

DRAWN	MBF	8 JAN 62
CHECK	DAW	8 JAN 62
CHECK	NSE	8 JAN 62
CHECK		8 JAN 62

REVISIONS
A C034626 RER 7 FEB 75
B 0037067 SS 30 JAN 08

ISSUE X3
DRAWING NUMBER M
RELEASE NO. SR 10026
REPLACES JV—91

FO—50378