0.25mm pitch, 1.1mm high, Top Contact Single Action Lock, High FPC Retention Force FPC connector

FH62 Series

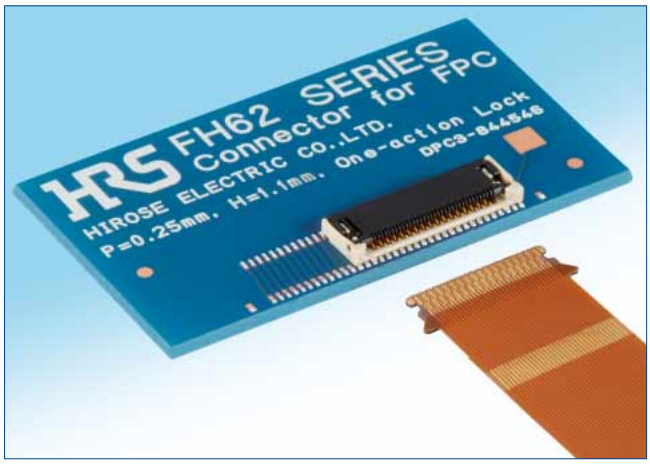

■Features

1. Space-saving design

・Space saving design with 0.25mm pitch, 4.0mm width. (Fig.1)

2. Automatic single action lock design

・Easy to use single action lock design by simply inserting FPC after mounting. (Fig.2) (Release the lock by operating or opening the lock lever when removing FPC.)

・Operation of the lock lever is not required at the time of mating FPC.
Can be operated with one hand.

・Operation of the lock lever is not required at the time of mating FPC.
Contributes to assembly time reduction.

・Operation of the lock lever is not required at the time of mating FPC.
Lock lever will not be damaged by operation.

・Operation of the lock lever is not required at the time of mating FPC.
No lever at insertion eliminates failures due to FPC movement during locking.

3. High FPC retention force

・The notches on both sides of FPC are held by the lock lever, generating a high FPC retention force in spite of the small size. (Fig.3)

4. Easy FPC insertion

・Wide guide for easy FPC insertion easy. (Fig.1)

5. Supports 0.3mm-thick FPC

・The design accommodates a rigid 0.3mm-thick FPC, which helps to prevent deformation of the FPC upon insertion.

6. Supports high speed transmission

・Supports high speed transmission with excellent impedance properties.
By making a differential pair with the same type of contacts (even number-even number of contacts, odd number-odd-number of contacts) excellent transmission characteristics are achieved, supporting eDP (ver1.4), MIPI (D-PHY) and USB3.0 standards. (Fig.4)

7. Environmental

・Halogen free
＊As defined by IEC 61249-2-21.
Br : 900ppm max, Cl : 900ppm max,
Br+Cl : 1,500ppm max

Dimension diagram : 35 pos.

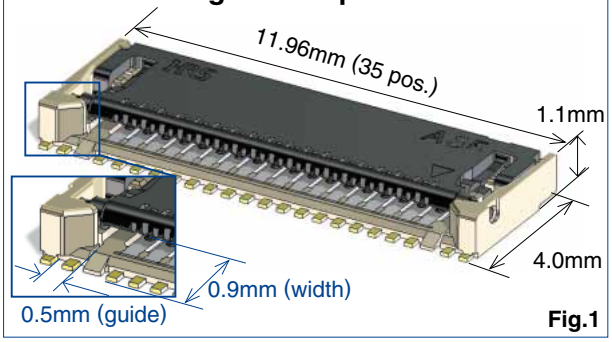

Fig.1

Single action lock

[Before mating]

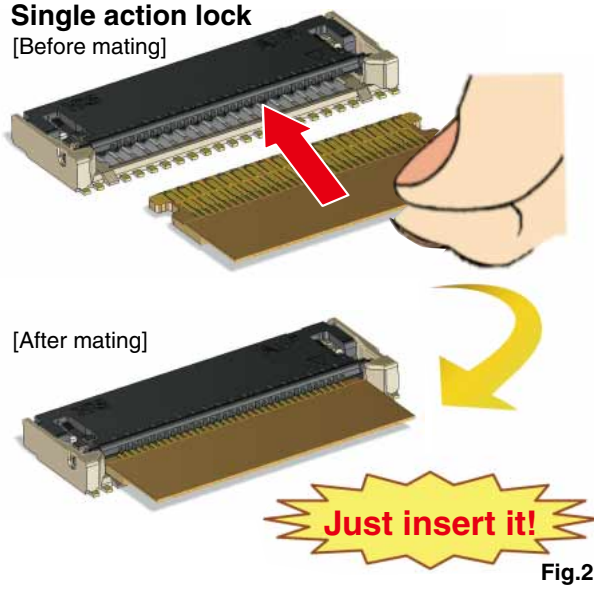

Fig.2

High FPC retention force through the lock design

[FPC being inserted]

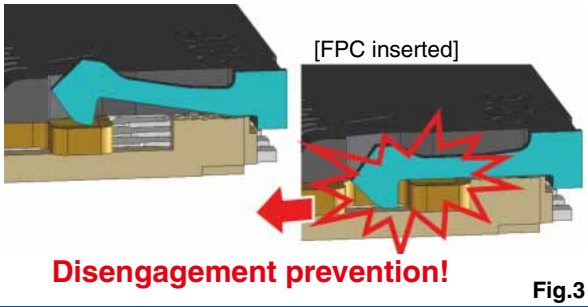

Fig.3

Supports high speed transmission (Differential impedance)

130ps rise time (20-80%)

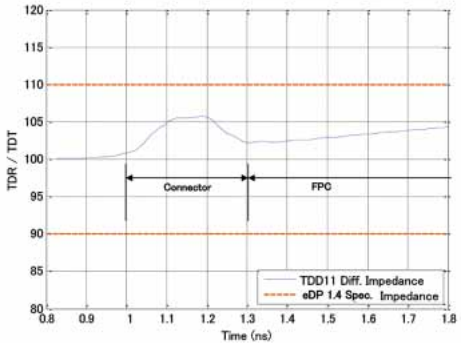

Fig.4

■Product Specifications

Rating	Rated current	0.25A	Operating temperature range	-55℃ to +85°C (Note 1)	Storage temperature range	-10℃ to +50°C (Note 2)
	Rated voltage	30V AC/DC	Operating humidity range	Relative humidity 90% max. (No condensation)	Storage humidity range	Relative humidity 90% max. (No condensation)

Adaptive FPC/FFC contact specifications	Thickness : = 0.3±0.03mm Gold plated contact traces

Item	Specification	Conditions
1. Insulation resistance	50Ω min.	100V DC
2. Withstanding voltage	No flashover or insulation breakdown	90V AC rms / 1 minute
3. Contact resistance	100mΩ max. ✻ Including FPC conductor resistance	1mA (AC)
4. Durability (insertion / withdrawal)	Contact resistance : 100mΩ max. No damage, cracks, or parts dislocation	10 cycles
5. Vibration	No electrical discontinuity of 1μs or more Contact resistance : 100mΩ max. No damage, cracks, or parts dislocation	Frequency : 10 to 55Hz, single amplitude of 0.75mm, 10 cycles in each of the 3 directions
6. Shock	No electrical discontinuity of 1μs or more Contact resistance : 100mΩ max. No damage, cracks, or parts dislocation	Acceleration of 981m/s², duration of 6ms, sine half-wave waveform, 3 cycles in each of the 3 axes
7. Humidity (Steady state)	Contact resistance : 100mΩ max. Insulation resistance : 50MΩ min. No damage, cracks, or parts dislocation	96 hours at temperature of 40℃ and humidity of 90% to 95%
8. Temperature cycle	Contact resistance : 100mΩ max. Insulation resistance : 50MΩ min. No damage, cracks, or parts dislocation	Temperature : -55°C → +15℃ to +35℃ → +85℃ → +15℃ to +35℃ Time : 30 → 2 to 3 → 30 → 2 to 3 (Minutes) 5 cycles
9. Resistance to soldering heat	No deformation of components affecting performance	Reflow : See recommended temperature profile (Page 8) Manual soldering: 350 ± 10°C for 5 seconds

Note 1 : Includes temperature rise caused by current flow.
Note 2 : The term "storage" refers to products stored for long period of time prior to mounting and use. Operating Temperature Range and Humidity Range covers non-conducting condition of installed connectors in storage, shipment or during transportation.

■Materials / Finish

Part	Material	Color / Finish	Remarks
Insulator	LCP	Beige	UL94V-0
	Polyamide	Black	
Contacts	Copper alloy	Gold plated	————

■Product Number Structure

Refer to the chart below when datermining the product specifications from the product number.
Please select from the product numbers listed in this catalog when placing orders.

FH 62 – 35S – 0.25 SHW (10)
❶ ❷ ❸ ❹ ❺ ❻

❶ Series name : FH	❺ Termination type SHW･･･SMT Horizontal staggered array mounting type
❷ Series No. : 62	
❸ Number of contacts : 35	
❹ Contact pitch : 0.25mm	❻ Specifications (10) : Standard (5,000pcs/reel) (99) : 500pcs/reel

■Connector Dimensions

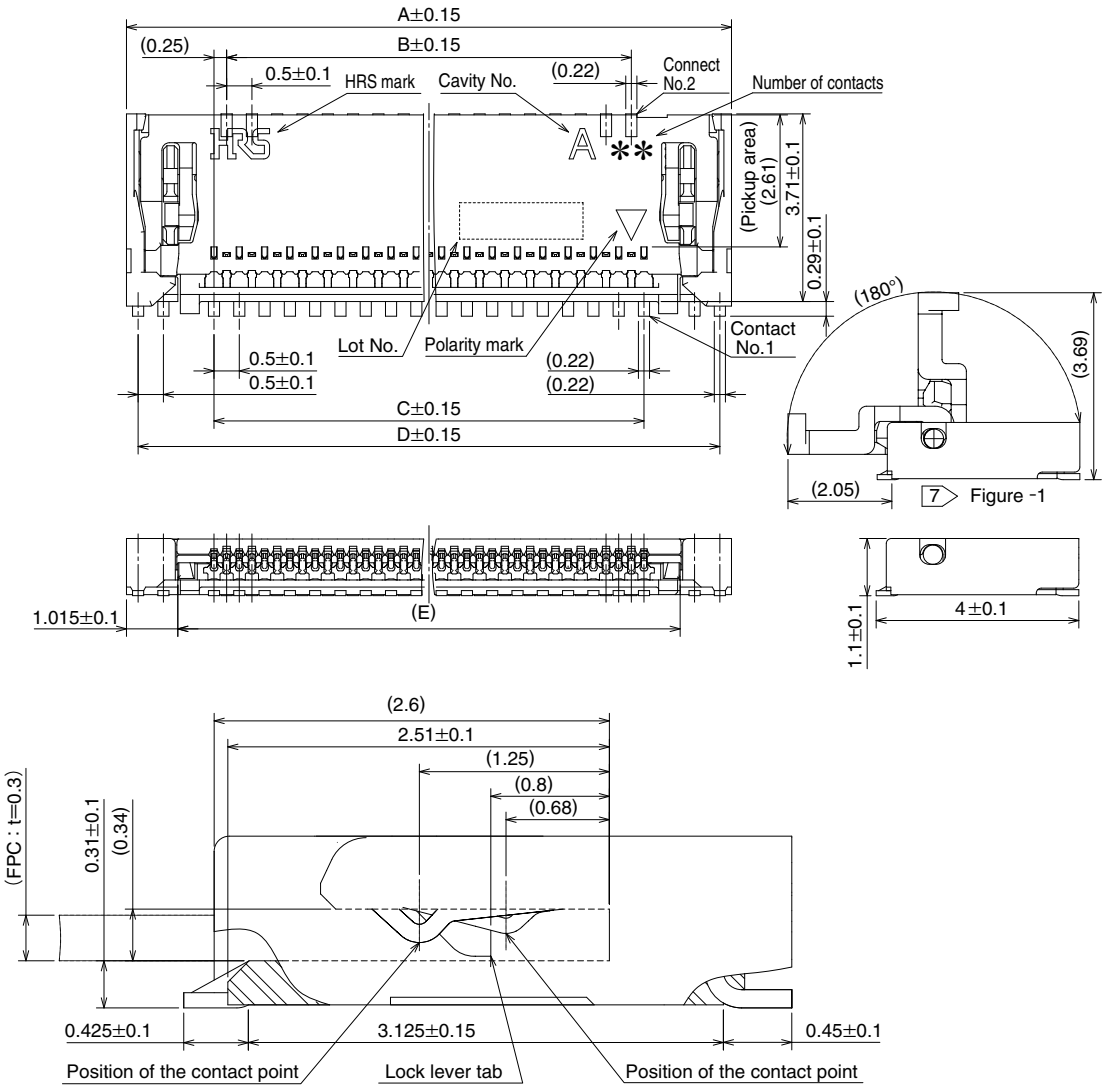

Note
1 : The dimension in parentheses are for reference.
2 : Lead co-planarity including reinforced chucking metals shall be 0.1 max.
3 : To be delivered with tape and reel packages.
See the packaging specifications for details.
4 : Note that preventive hole for sink mark or slit could be added for improvement.
5 : The quality remains good, even with the dark spots, which could occasionally occur on molded plastic.
6 : This product satisfies halogen free requirements defined as 900ppm maximum chlorine, 900ppm maximum bromine, and 1500ppm maximum total of chlorine and bromine.
7 Figure-1 Shows the state of opened lock cover. FPC can be pulled out by opening the lock lever by 45 degrees or more.

■Connector Dimensions

Units : mm

Part No.	HRS No.	No. of contacts	A	B	C	D	E
FH62-13S-0.25SHW(**)	Under planning (Note 1)	13	6.46	2.5	3	6	4.43
FH62-15S-0.25SHW(**)	Under planning (Note 1)	15	6.96	3	3.5	6.5	4.93
FH62-17S-0.25SHW(**)	Under planning (Note 1)	17	7.46	3.5	4	7	5.43
FH62-19S-0.25SHW(**)	Under planning (Note 1)	19	7.96	4	4.5	7.5	5.93
FH62-21S-0.25SHW(**)	Under planning (Note 1)	21	8.46	4.5	5	8	6.43
FH62-23S-0.25SHW(**)	Under planning (Note 1)	23	8.96	5	5.5	8.5	6.93
FH62-25S-0.25SHW(**)	Under planning (Note 1)	25	9.46	5.5	6	9	7.43
FH62-27S-0.25SHW(**)	Under planning (Note 1)	27	9.96	6	6.5	9.5	7.93
FH62-31S-0.25SHW(**)	Under planning (Note 1)	31	10.96	7	7.5	10.5	8.93
FH62-35S-0.25SHW(**)	580-4300-0 **	35	11.96	8	8.5	11.5	9.93
FH62-39S-0.25SHW(**)	Under planning (Note 1)	39	12.96	9	9.5	12.5	10.93
FH62-41S-0.25SHW(**)	Under planning (Note 1)	41	13.46	9.5	10	13	11.43
FH62-51S-0.25SHW(**)	Under planning (Note 1)	51	15.96	12	12.5	15.5	13.93
FH62-55S-0.25SHW(**)	Under planning (Note 1)	55	16.96	13	13.5	16.5	14.93
FH62-61S-0.25SHW(**)	Under planning (Note 1)	61	18.46	14.5	15	18	16.43

Note 1 : Contact positions without HRS No. are currently under planning.
Please contact hirose for detailed information about product variation.

◆Recommended PCB Mounting Pattern

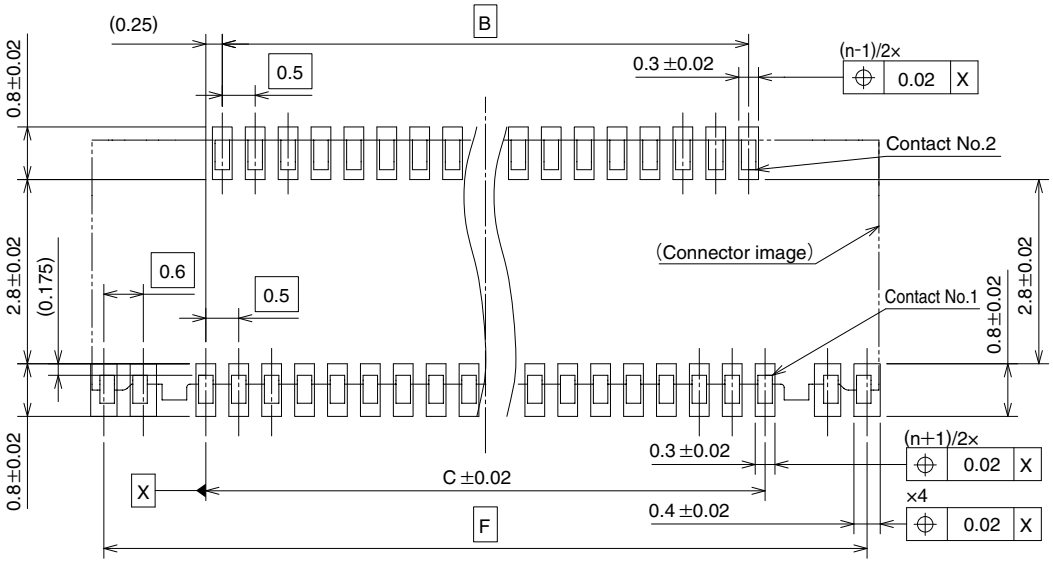

◆Recommended Stencil Pattern

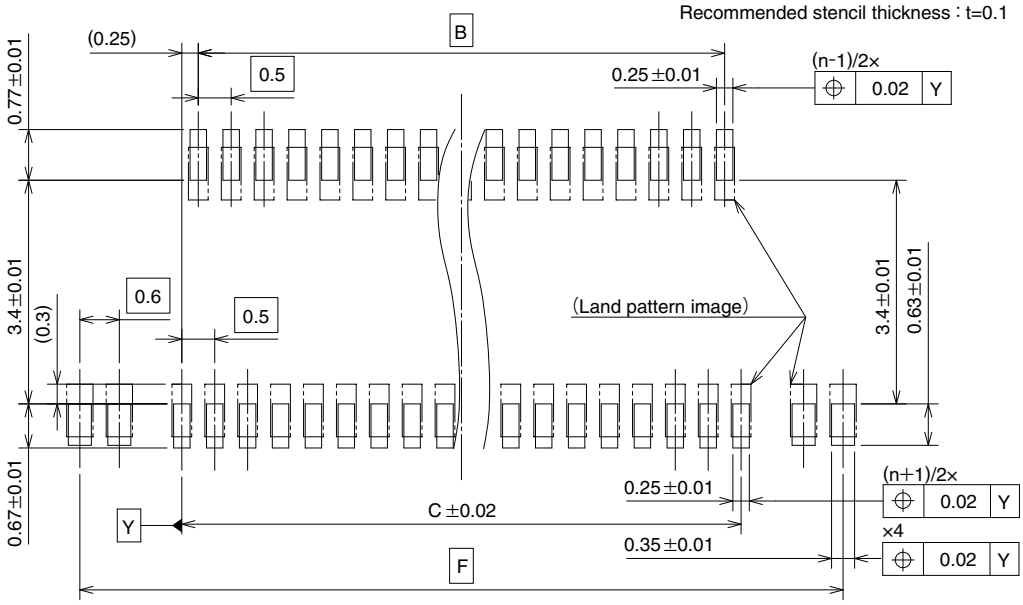

Note 8 : 'n' shows the number of contacts.

◆Recommended Dimensions of PCB Mounting Pattern and Stencil Pattern

Units : mm

Part No.	HRS No.	No. of contacts	B	C	F
FH62-13S-0.25SHW(**)	Under planning (Note 1)	13	2.5	3	6.1
FH62-15S-0.25SHW(**)	Under planning (Note 1)	15	3	3.5	6.6
FH62-17S-0.25SHW(**)	Under planning (Note 1)	17	3.5	4	7.1
FH62-19S-0.25SHW(**)	Under planning (Note 1)	19	4	4.5	7.6
FH62-21S-0.25SHW(**)	Under planning (Note 1)	21	4.5	5	8.1
FH62-23S-0.25SHW(**)	Under planning (Note 1)	23	5	5.5	8.6
FH62-25S-0.25SHW(**)	Under planning (Note 1)	25	5.5	6	9.1
FH62-27S-0.25SHW(**)	Under planning (Note 1)	27	6	6.5	9.6
FH62-31S-0.25SHW(**)	Under planning (Note 1)	31	7	7.5	10.6
FH62-35S-0.25SHW(**)	580-4300-0 **	35	8	8.5	11.6
FH62-39S-0.25SHW(**)	Under planning (Note 1)	39	9	9.5	12.6
FH62-41S-0.25SHW(**)	Under planning (Note 1)	41	9.5	10	13.1
FH62-51S-0.25SHW(**)	Under planning (Note 1)	51	12	12.5	15.6
FH62-55S-0.25SHW(**)	Under planning (Note 1)	55	13	13.5	16.6
FH62-61S-0.25SHW(**)	Under planning (Note 1)	61	14.5	15	18.1

Note 1 : Contact positions without HRS No. are currently under planning.
Please contact hirose for detailed information about product variation.

◆Diagram of a recommended FPC dimension (when using plated lead part)

(FPC contact thickness : t=0.30±0.03)

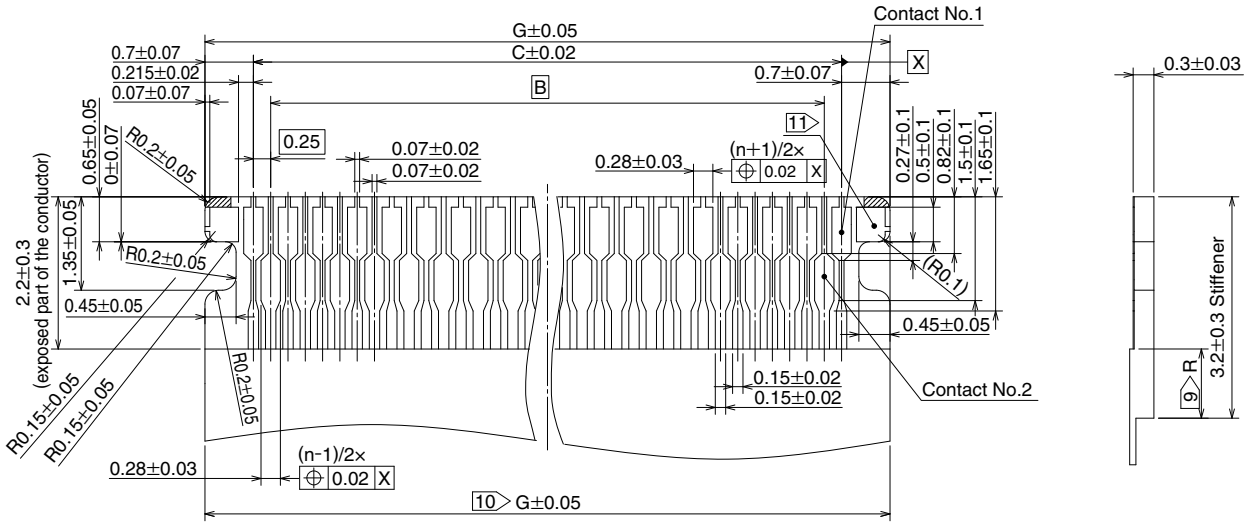

Note
9 Dimension R must be 0.5mm minimum.
10 Indicated tolerance is applicable to the exposed conductor.
11 Both end sides of contact pad on FPC cannot be used for signal transmission.

◆Recommended FPC dimension (when not using plated lead part)

(FPC contact thickness : t=0.30±0.03)

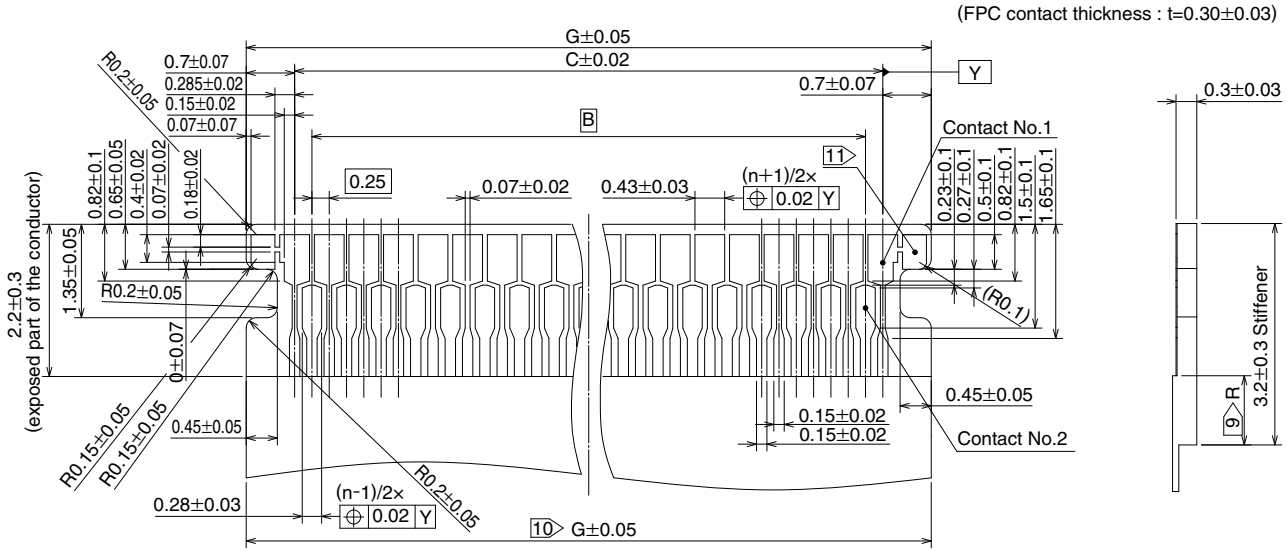

Note
9 Dimension R must be 0.5mm minimum.
10 Indicated tolerance is applicable to the exposed conductor.
11 Both end sides of contact pad on FPC cannot be used for signal transmission.

◆Recommended FPC Dimensions

Units : mm

Part No.	HRS No.	No. of contacts	B	C	G
FH62-13S-0.25SHW(**)	Under planning (Note 1)	13	2.5	3	4.4
FH62-15S-0.25SHW(**)	Under planning (Note 1)	15	3	3.5	4.9
FH62-17S-0.25SHW(**)	Under planning (Note 1)	17	3.5	4	5.4
FH62-19S-0.25SHW(**)	Under planning (Note 1)	19	4	4.5	5.9
FH62-21S-0.25SHW(**)	Under planning (Note 1)	21	4.5	5	6.4
FH62-23S-0.25SHW(**)	Under planning (Note 1)	23	5	5.5	6.9
FH62-25S-0.25SHW(**)	Under planning (Note 1)	25	5.5	6	7.4
FH62-27S-0.25SHW(**)	Under planning (Note 1)	27	6	6.5	7.9
FH62-31S-0.25SHW(**)	Under planning (Note 1)	31	7	7.5	8.9
FH62-35S-0.25SHW(**)	580-4300-0 **	35	8	8.5	9.9
FH62-39S-0.25SHW(**)	Under planning (Note 1)	39	9	9.5	10.9
FH62-41S-0.25SHW(**)	Under planning (Note 1)	41	9.5	10	11.4
FH62-51S-0.25SHW(**)	Under planning (Note 1)	51	12	12.5	13.9
FH62-55S-0.25SHW(**)	Under planning (Note 1)	55	13	13.5	14.9
FH62-61S-0.25SHW(**)	Under planning (Note 1)	61	14.5	15	16.4

Note 1 : Contact positions without HRS No. are currently under planning.
Please contact hirose for detailed information about product variation.

◆FPC Construction (Recommended Specifications)

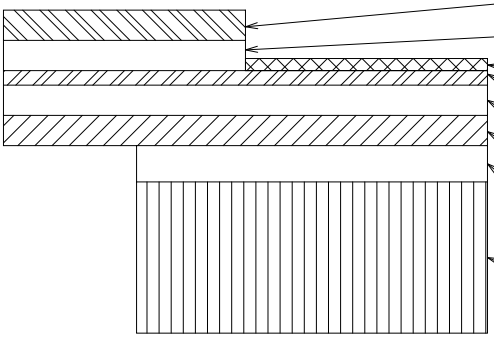

MATERIAL NAME	MATERIAL	THICKNESS (μm)
Covering film layer	Polyimide 1mil	25
Cover adhesive		25
Surface treatment	1μm to 6μm nickel underplated 0.2μm gold plated	(4)
Copper foil	Cu 1oz	35
Base adhesive	Heat-hardened adhesive	25
Base film	Polyimide 1mil	25
Reinforcement material adhesive	Heat-hardened adhesive	35
Stiffener	Polyimide 7mil	175

3. Caution

1. Material composition of FPC is a reference example. Please adjust the thickness of the FPC mating section to 0.3±0.03mm in reference to the material composition.
2. For the details of the material composition, please contact each FPC manufacturer.

◆Packaging Specifications

●Embossed Carrier Tape Dimensions (Tape width up to 24mm)

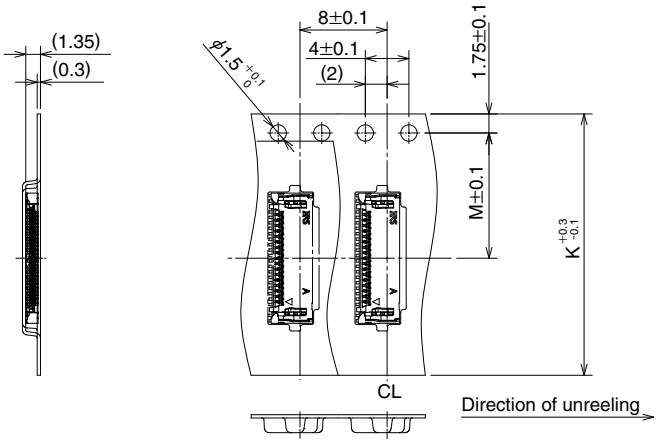

●Embossed Carrier Tape Dimensions (Tape width 32mm and over)

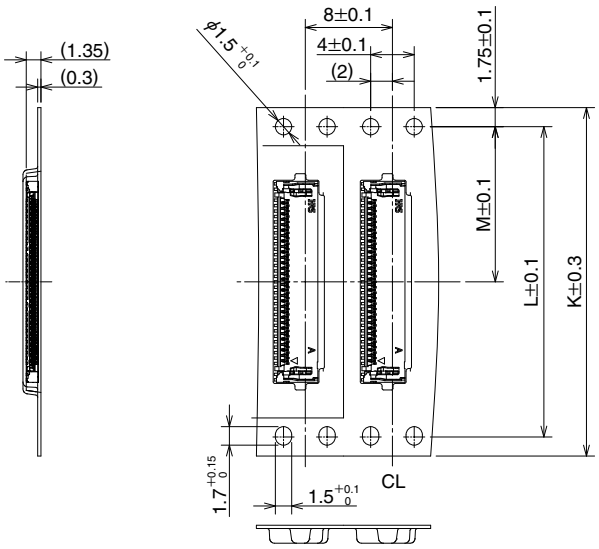

●Reel Dimensions

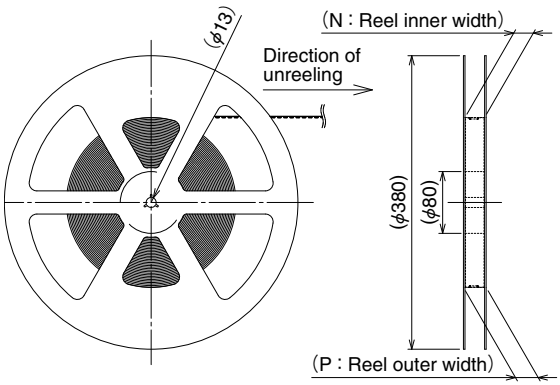

●Leader, Trailer Dimensions

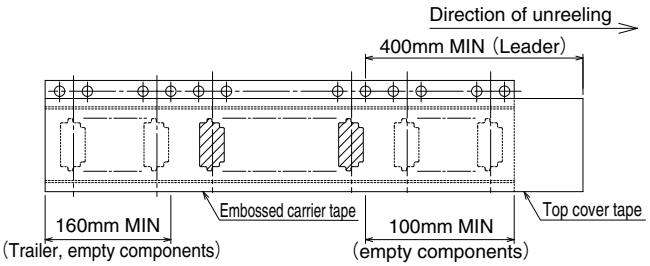

Units : mm

Part No.	HRS No.	No. of contacts	K	L	M	N	P
FH62-13S-0.25SHW(**)	Under planning (Note 1)	13	16	-	7.5	17.4	21.4
FH62-15S-0.25SHW(**)	Under planning (Note 1)	15	24	-	11.5	25.4	29.4
FH62-17S-0.25SHW(**)	Under planning (Note 1)	17					
FH62-19S-0.25SHW(**)	Under planning (Note 1)	19					
FH62-21S-0.25SHW(**)	Under planning (Note 1)	21					
FH62-23S-0.25SHW(**)	Under planning (Note 1)	23					
FH62-25S-0.25SHW(**)	Under planning (Note 1)	25					
FH62-27S-0.25SHW(**)	Under planning (Note 1)	27					
FH62-31S-0.25SHW(**)	Under planning (Note 1)	31					
FH62-35S-0.25SHW(**)	580-4300-0 **	35					
FH62-39S-0.25SHW(**)	Under planning (Note 1)	39					
FH62-41S-0.25SHW(**)	Under planning (Note 1)	41					
FH62-51S-0.25SHW(**)	Under planning (Note 1)	51	32	28.4	14.2	33.4	37.4
FH62-55S-0.25SHW(**)	Under planning (Note 1)	55					
FH62-61S-0.25SHW(**)	Under planning (Note 1)	61					

Note 1 : Contact positions without HRS No. are currently under planning.
Please contact hirose for detailed information about product variation.

◆Temperature Profile

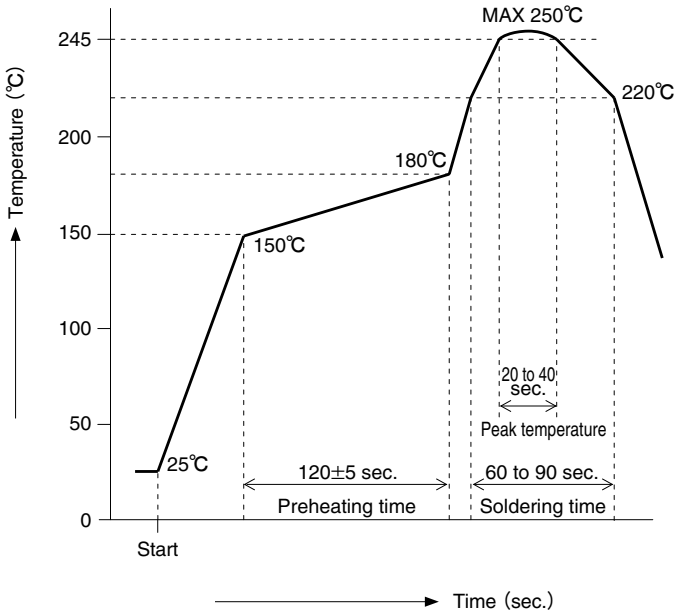

Applicable Conditions

Reflow method	: IR/Hot air
Reflow environment	: Room air
Solder	: Paste type Sn/3.0Ag/0.5Cu (M705-GRN360-K2-V made by Senju Metal Industry Co.)
Test PCB	: PCB material and size Glass epoxy 32.85×18.3×0.8mm Land size, per recommended on page 4.
Metal mask	: Thickness and opening size Per recommended on page 4.

This temperature profile is based on the above conditions. It may vastly depending on solder paste type, manufacturer, PCB size and mounting materials. Please use only after checking the mounting conditions.

◆Connector operation and points to note

[Operation method]

As this connector is a small-sized, thin product, care needs to be taken when handling. Please check the following before use.

1. Initial condition

❶The product is delivered with the lock lever closed, you do not need to operate it except for when removing the FPC.

2. How to insert FPC

❶Insert FPC with the conductor surface facing upwards, horizontal to the board surface.

[Caution]

・During FPC insertion, do not twist the FPC to up and down, right and left or an angle. It may cause deformation of the contacts and contact failure.

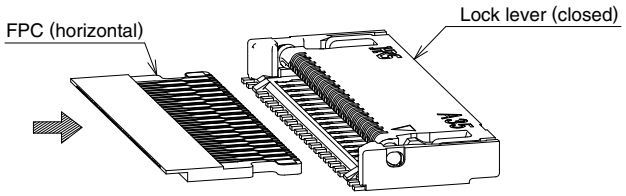

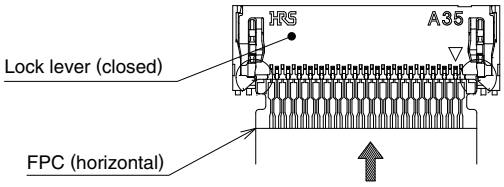

✕ NG

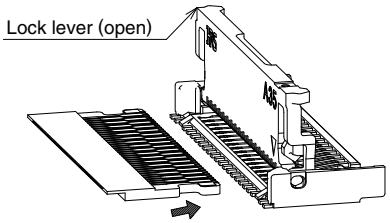

✕ NG

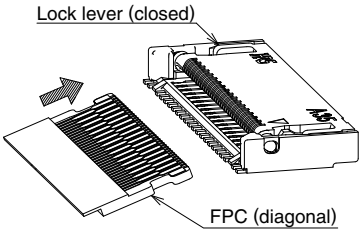

✕ NG

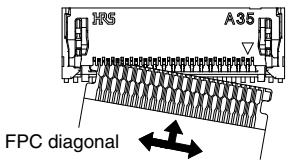

3. Check the inserted state of FPC

When FPC is completely inserted, visually inspect the status.

○ OK

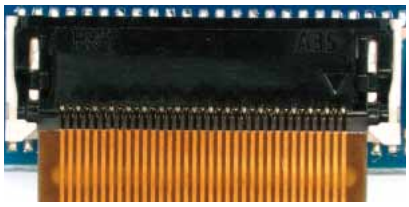

The outer shapes of FPC and the lock lever are parallel and inserted to the end.

✕ NG

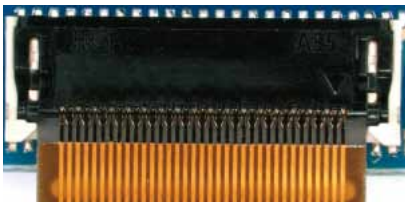

FPC is not inserted deep enough.

✕ NG

FPC is inserted diagonally.

◆Connector operation and points to note

[Operation method]

4. How to remove FPC

❶Push up the lock lever slowly, and release the lock.

[Caution]
・The lock lever can't be opened over 180°.
・After releasing the lock lever, do not touch the contact.
・Do not raise, pull, or twist the lock lever.

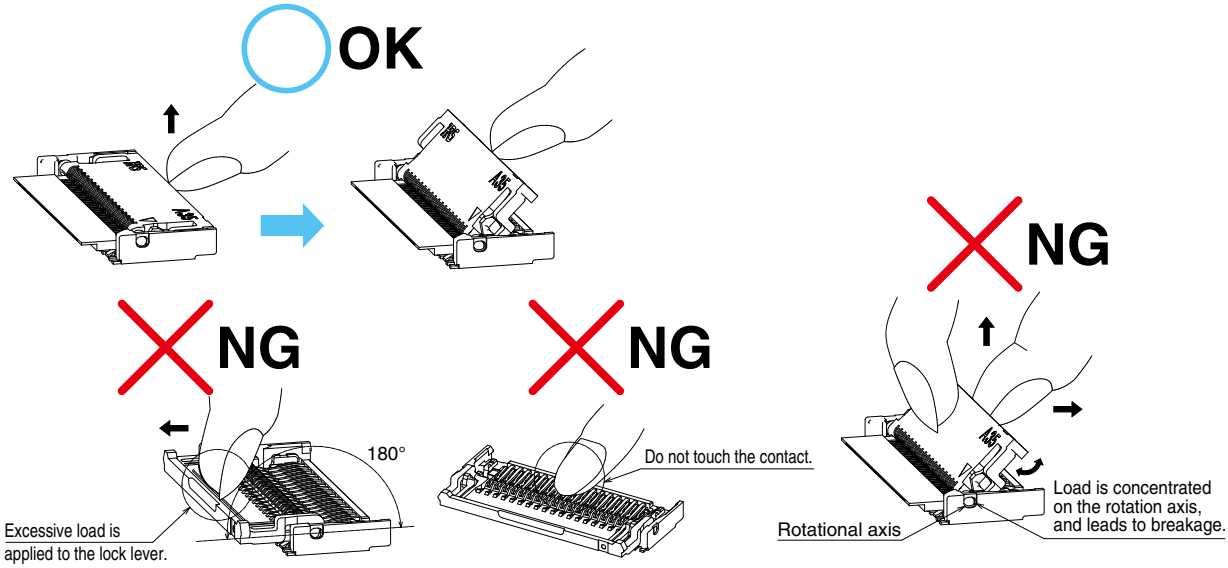

❷After releasing the lock lever, remove the FPC in the horizontal direction.
❸After remove of the FPC, close the lock lever.

[Caution]
・Do not pull out FPC while the lock lever is not opened to 45° or more.
・Ensure both ends of the lock lever are closed.

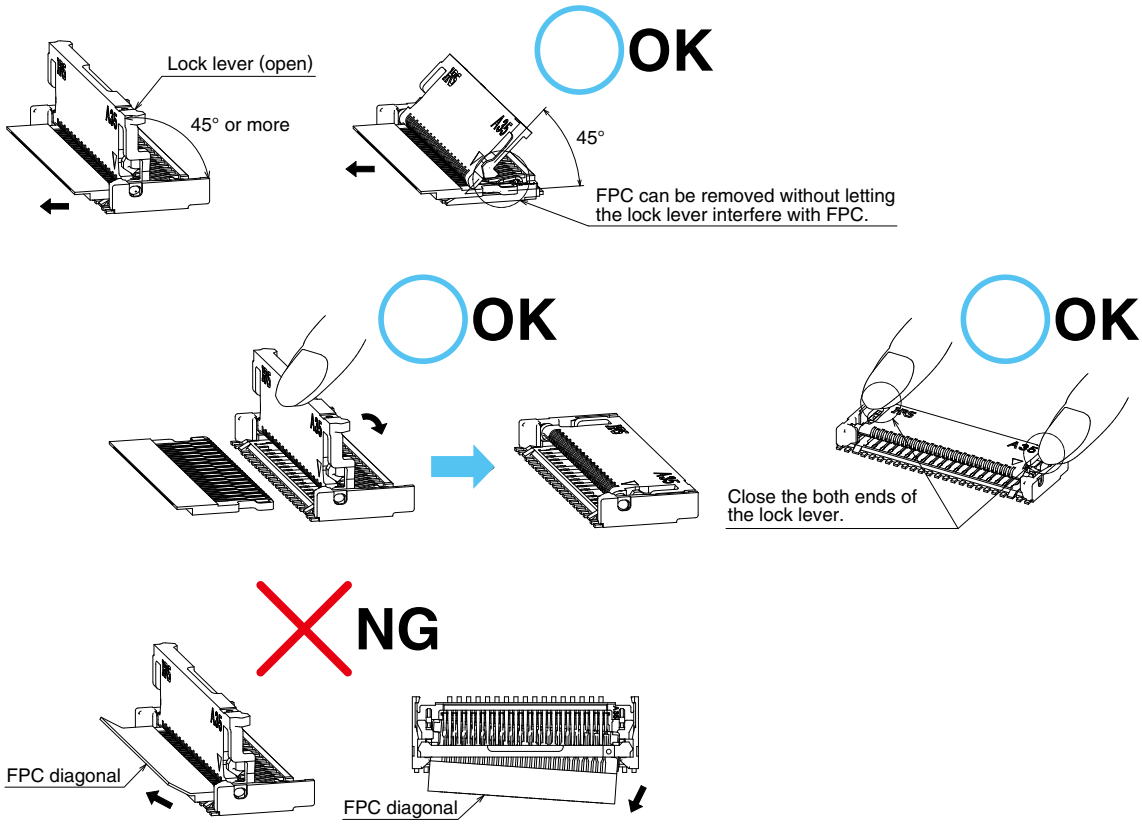

◆Connector operation and points to note

[Operation methods]

5. FPC routing after connection

❶Depending on a FPC rounding, a load is applied to connector, and a contact failure may occur.
To prevent a failure, take the following notes into a consideration during mechanism design.
[Caution]
・Make sure that FPC and stiffener do not contact chassis.
・Avoid applying forces to FPC in vertical or horizontal directions.
In addition, avoid pulling up and down on the FPC.
・When fixing FPC after FPC cabling, avoid pulling FPC, and route the wire FPC with slack.
In this regard, the stiffener is parallel to the PCB.
・Do not mount other components touching to the FPC underneath the FPC stiffener.

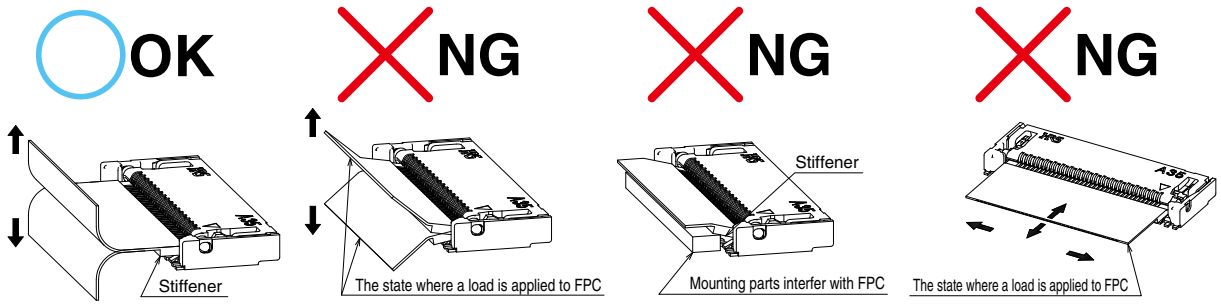

[Cautions when Mounting PCB]

◆Warp of PCB
Minimize warp of the PCB as much as possible.
Lead co-planarity including reinforced metals is 0.1mm or less.
Too much wrap of the PCB may result in a soldering failure.

◆Flexible board design
Please make sure to put a stiffener on the backside of the flexible board.
We recommend a glass epoxy material with the thickness of 0.3mm MIN.

◆Load to Connector
Do not add 1.0N or greater external force when unreel or pick and place the connector etc, or it may get broken.
In addition, do not insert the FPC or operate the connector before mounting.

◆Load to PCB
・Splitting a large PCB into several pieces
・Screwing the PCB
Avoid the handling described above so that no force is exerted on the PCB during the assembly process.
Otherwise, the connector may become defective.

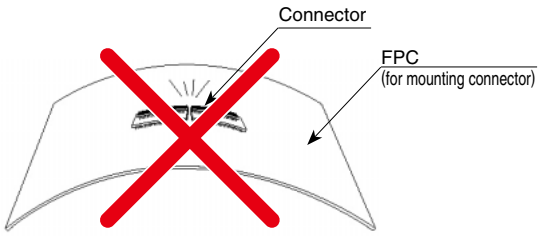

◆Instructions on manual soldering
Follow the instructions shown below when soldering the connector manually during work, etc.

❶Do not perform any reflow or hand soldering operation while FPC is inserted in the connector.
❷Do not apply extreme heat, or allow the soldering iron to touch anything other than the connector lead.
This could cause the connector to be deformed or melted.
❸Do not supply excessive solder (flux).
If excessive solder (flux) is applied to the contact, the solder or flux could adhere on the contact point and cause contact failure.

USA:
HIROSE ELECTRIC (U.S.A.), INC. HEADQUARTERS CHICAGO OFFICE
2300 Warrenville Road, Suite 150,
Downers Grove, IL 60515
Phone : +1-630-282-6700
http://www.hirose.com/us/

USA:
HIROSE ELECTRIC (U.S.A.), INC. SAN JOSE OFFICE
2841 Junction Ave, Suite 200
San Jose, CA. 95134
Phone : +1-408-253-9640
Fax : +1-408-253-9641
http://www.hirose.com/us/

USA:
HIROSE ELECTRIC (U.S.A.), INC. DETROIT OFFICE (AUTOMOTIVE)
17197 N. Laurel Park Drive, Suite 253,
Livonia, MI 48152
Phone : +1-734-542-9963
Fax : +1-734-542-9964
http://www.hirose.com/us/

USA:
HIROSE ELECTRIC (U.S.A.), INC. BOSTON OFFICE
300 Brickstone Square Suite 201,
Andover, MA 01810
Phone : +1-978-662-5255

THE NETHERLANDS:
HIROSE ELECTRIC EUROPE B.V.
Hogehillweg #8 1101 CC Amsterdam Z-O
Phone : +31-20-6557460
Fax : +31-20-6557469
http://www.hirose.com/eu/

GERMANY:
HIROSE ELECTRIC EUROPE B.V. GERMAN BRANCH
Schoenbergstr. 20, 73760 ostfildern
Phone : +49-711-456002-1
Fax : +49-711-456002-299
http://www.hirose.com/eu/

GERMANY:
HIROSE ELECTRIC EUROPE B.V. NUREMBERG OFFICE
Neumeyerstrasse 22-26, 90411 Nurnberg
Phone : +49-911 32 68 89 63
Fax : +49-911 32 68 89 69
http://www.hirose.com/eu/

GERMANY:
HIROSE ELECTRIC EUROPE B.V. HANOVER OFFICE
Bayernstr. 3, Haus C 30855 Langenhagen, Germany
Phone : +49-511 97 82 61 30
Fax : +49-511 97 82 61 35
http://www.hirose.com/eu/

FRANCE:
HIROSE ELECTRIC EUROPE B.V. PARIS OFFICE
130 Avenue Joseph Kessel, Bat E, 78960
Voisins le Bretonneux, France
Phone : +33-1-85764886
Fax : +33-1-85764823
http://www.hirose.com/eu/

UNITED KINGDOM:
HIROSE ELECTRIC EUROPE BV (UK BRANCH)
4 Newton Court, Kelvin Drive, Knowlhill,
Milton Keynes, MK5 8NH
Phone : +44-1908 202050
Fax : +44-1908 202058
http://www.hirose.com/eu/

CHINA:
HIROSE ELECTRIC (SHANGHAI) CO., LTD.
18, Enterprise Center Tower 2, 209# Gong He Road, Jing'an District, Shanghai, CHINA 200070
Phone : +86-21-6391-3355
Fax : +86-21-6391-3335
http://www.hirose.com/cn/

CHINA:
HIROSE ELECTRIC (SHANGHAI) CO.,LTD. BEIJING BRANCH
A1001, Ocean International Center, Building 56# East 4th Ring Middle Road, ChaoYang District, Beijing, 100025
Phone : +86-10-5165-9332
Fax : +86-10-5908-1381
http://www.hirose.com/cn/

CHINA:
HIROSE ELECTRIC TECHNOLOGIES (SHENZHEN) CO., LTD.
Room 09-13, 19/F, Office Tower Shun Hing Square, Di Wang Commercial Centre, 5002 Shen Nan Dong Road, Shenzhen City, Guangdong Province, 518008
Phone : +86-755-8207-0851
Fax : +86-755-8207-0873
http://www.hirose.com/cn/

HONG KONG:
HIROSE ELECTRIC HONGKONG TRADING CO., LTD.
Room 1001, West Wing, Tsim Sha Tsui Centre, 66 Mody Road, Tsim Sha Tsui East, Kowloon, Hong Kong
Phone : +852-2803-5338
Fax : +852-2591-6560
http://www.hirose.com/hk/

TAIWAN:
HIROSE ELECTRIC TAIWAN CO., LTD.
103 8F, No.87, Zhengzhou Rd., Taipei
Phone : +886-2-2555-7377
Fax : +886-2-2555-7350
http://www.hirose.com/tw/

KOREA:
HIROSE KOREA CO.,LTD.
143, Gongdan 1-daero, Siheung-si,
Gyeonggi-do, 15084, Korea
Phone : +82-31-496-7000
Fax : +82-31-496-7100
http://www.hirose.co.kr/

SINGAPORE:
HIROSE ELECTRIC SINGAPORE PTE. LTD.
03, Anson Road, #20-01, Springleaf Tower, Singapore 079909
Phone : +65-6324-6113
Fax : +65-6324-6123
http://www.hirose.com/sg/

INDIA:
HIROSE ELECTRIC SINGAPORE PTE. LTD. DELHI LIAISON OFFICE
Office NO.552, Regus-Green Boulevard, Level5, Tower C, Sec62, Plot B-9A, Block B, Noida, 201301, Uttar Pradesh, India
Phone : +91-12-660-8018
Fax : +91-120-4804949
http://www.hirose.com/sg/

INDIA:
HIROSE ELECTRIC SINGAPORE PTE. LTD. BANGALORE LIAISON OFFICE
Unit No-403, 4th Floor, No-84, Barton Centre, Mahatma Gandhi (MG) Road, Bangalore 560 001, Karnataka, India
Phone : +91-80-4120 1907
Fax : +91-80-4120 9908
http://www.hirose.com/sg/

MALAYSIA:
PENANG REPRESENTATIVE OFFICE
73-3-1, Ideal@The One, Jalan Mahsuri, Bayan Lepas Penang, 11950, Malaysia
Phone : +604-648-5536
http://www.hirose.com/sg/

THAILAND:
BANGKOK OFFICE (REPRESENTATIVE OFFICE)
Unit 4703, 47th FL., 1 Empire Tower, South Sathorn Road, Yannawa, Sathorn, Bangkok 10120 Thailand
Phone : +66-2-686-1255
Fax : +66-2-686-3433
http://www.hirose.com/sg/

Creative Links to World Electronics ®

HRS

HIROSE ELECTRIC CO.,LTD.

2-6-3,Nakagawa Chuoh,Tsuzuki-Ku,Yokohama-Shi 224-8540,JAPAN
TEL: +81-45-620-3526 Fax: +81-45-591-3726
http://www.hirose.com
http://www.hirose-connectors.com