BUD	PART NAME	EXTRUDED ALUMINUM ENCLOSURE	PART No.	EXT-9164	REVISION DATE	2/9/15

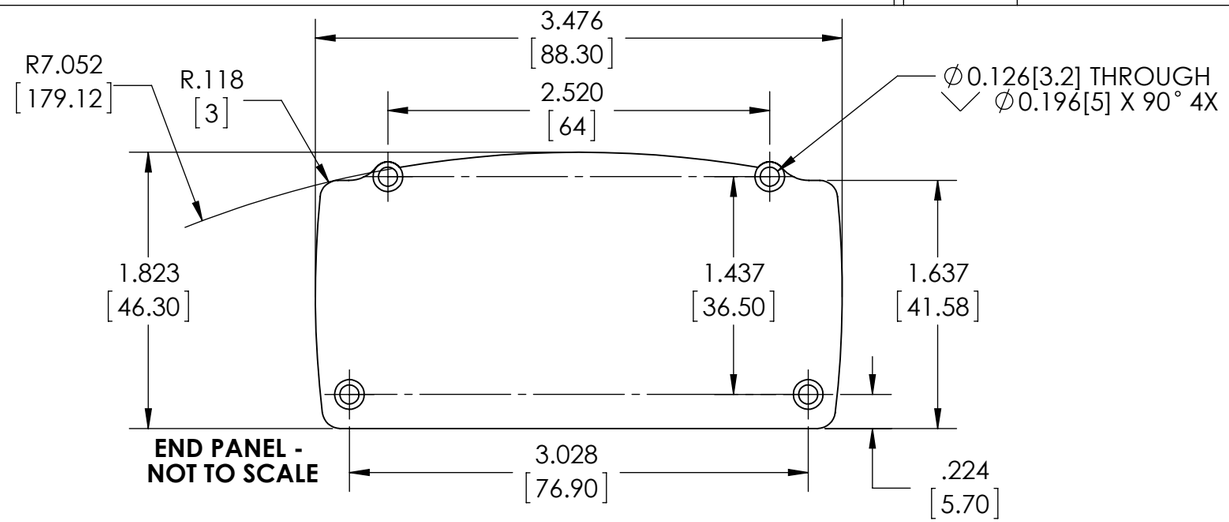

END PANEL - NOT TO SCALE

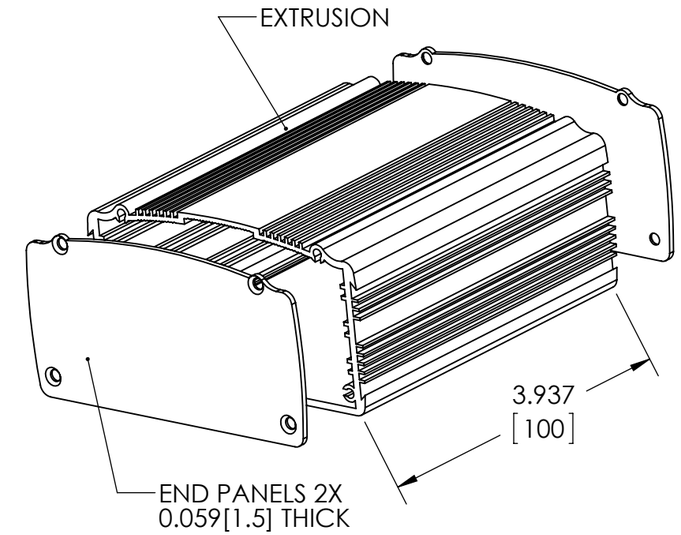

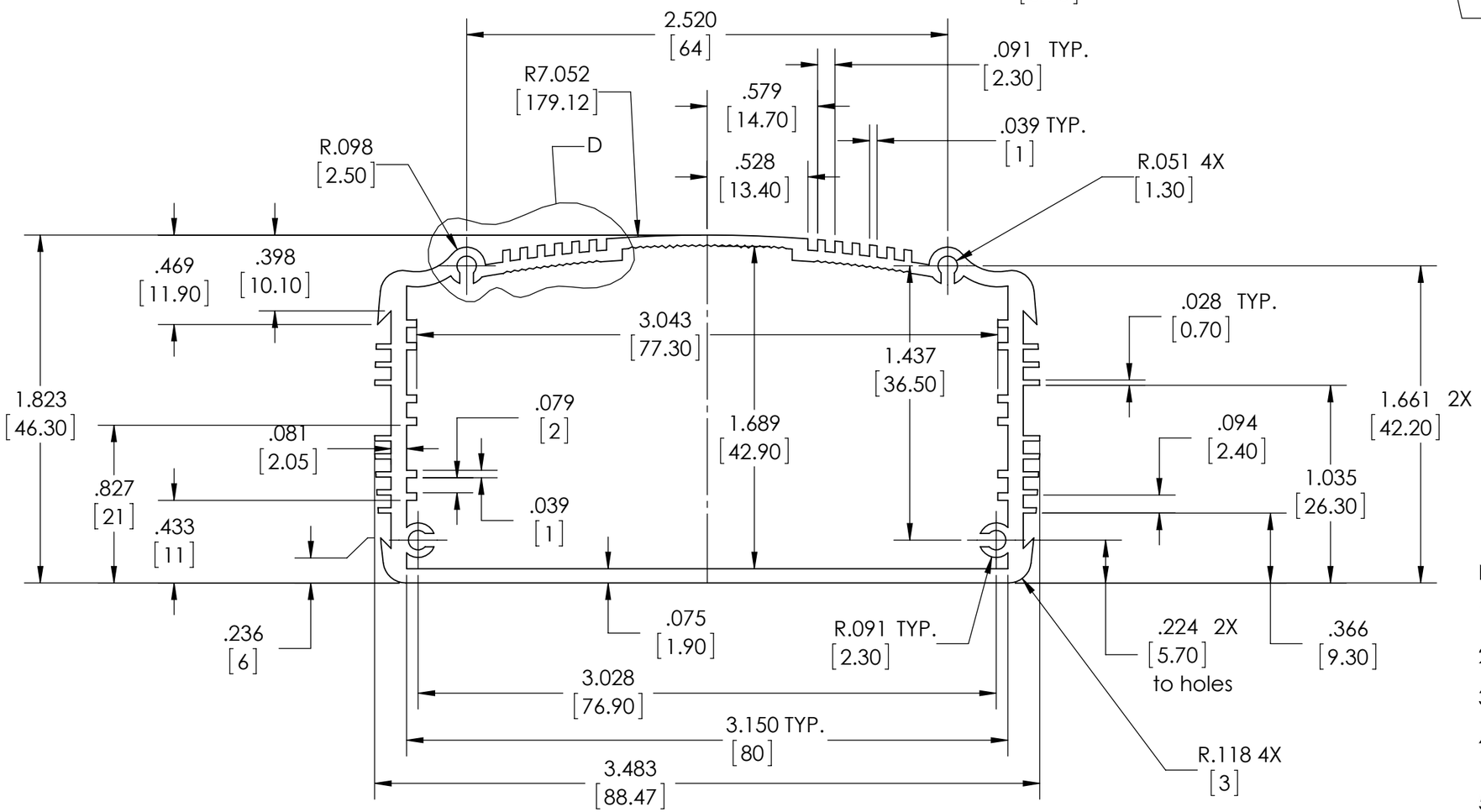

EXTRUSION PROFILE

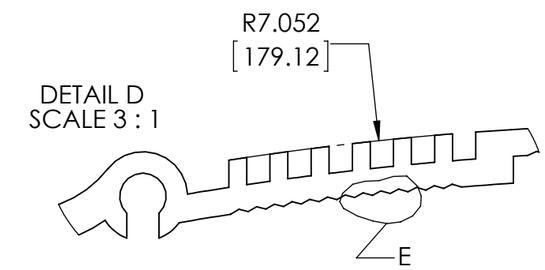

DETAIL D
SCALE 3 : 1

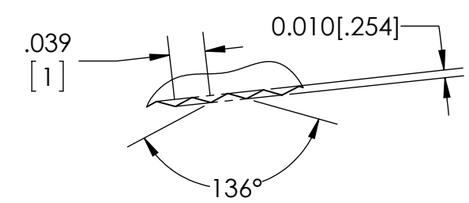

DETAIL E
SCALE 6 : 1

NOTES:

1- MATERIAL: EXTRUSION/END PANELS - ALUMINUM

2- FINISH: BLACK

3- DIMENSIONS ARE INCH[MM]

4- TOLERANCE ON PROFILE/END PANELS = +/- .020[.50]
TOLERANCE ON CUT LENGTH = +/- .062[1.57]

5- SUPPLIED WITH TWO END PANELS AND EIGHT M3 FLATHEAD SCREWS FOR MOUNTING THE PANELS