Intrinsically Safe: EB3C Discrete Input Barriers

Key features:

Explosion Protection	
Discrete Input Barriers:	[Exia] II C

- IEC60079 compliant
- Dry-contact switches can be connected to the EB3C
- 8- and 16-circuit types are available in common wiring types, ideal for connection to PLCs (DC voltage only)
- Universal AC power voltage (100 to 240V AC) or 24V DC power (UL rating: 100 ~ 120V AC)
- No grounding required
- IDEC's original spring-up terminals minimizes wiring time
- Installation: 35-mm-wide DIN rail mounting or direct panel mounting
- Global usage
  USA: UL/FM
  Canada: CSA
  Europe: CE marking, ATEX
  China: CQST
  Russia: GOST-R
  Japan: TIIS
  Korea: KOSHA
- Ship class: NK (Japan), KR (Korea)

LISTED

APPROVED

Dry Contact Switches

Dry-contact switches can be connected to the EB3C.

LB Series

CW Series

HW Series

Common Wiring for PLC Inputs

8- and 16-circuit types are available in common wiring types, ideal for connection to PLCs (DC voltage only).

Connector Type

MIL connector on the non-hazardous side

- Easy connection to PLCs
- Wiring is cut by 90% (compared with IDEC's 16-circuit EB3C)
- Various 20-pin MIL connectors can be connected

Spring-up Fingersafe Terminals Reduce Wiring Time

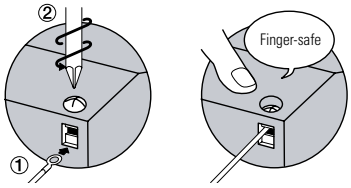

Part Numbers

Discrete Input Barriers

Power Voltage	Number of Channels	Connection to Non-intrinsically Safe Circuit	Input Wiring Method	Output		Part Number
100 to 240V AC (UL rating: 100 ~ 120V AC)	1	Screw Terminal	Separate/Common Wiring Compatible	Relay		EB3C-R01A
	2					EB3C-R02A
	3					EB3C-R03A
	5					EB3C-R05A
	6					EB3C-R06A
	8					EB3C-R08A
	10					EB3C-R10A
	8		Common Wiring Only			EB3C-R08CA
	1		Separate/Common Wiring Compatible	Transistor (Sink/Source)		EB3C-T01A
	2					EB3C-T02A
	3					EB3C-T03A
	5					EB3C-T05A
	6					EB3C-T06A
	8					EB3C-T08A
	10					EB3C-T10A
	8		Common Wiring Only	Transistor	Sink	EB3C-T08CKA*
	16					EB3C-T16CKA*
	8				Source	EB3C-T08CSA
	16					EB3C-T16CSA
24V DC	1		Separate/Common Wiring Compatible	Relay		EB3C-R01D
	2					EB3C-R02D
	3					EB3C-R03D
	5					EB3C-R05D
	6					EB3C-R06D
	8					EB3C-R08D
	10					EB3C-R10D
	8		Common Wiring Only			EB3C-R08CD
	16					EB3C-R16CD
	1		Separate/Common Wiring Compatible	Transistor (Sink/Source)		EB3C-T01D
	2					EB3C-T02D
	3					EB3C-T03D
	5					EB3C-T05D
	6					EB3C-T06D
	8					EB3C-T08D
	10					EB3C-T10D
	8		Common Wiring Only	Transistor	Sink	EB3C-T08CKD*
	16					EB3C-T16CKD*
	8				Source	EB3C-T08CSD
	16					EB3C-T16CSD
	16		Connector Wiring		Sink	EB3C-T16CKD-C*
					Source	EB3C-T16CSD-C

*Note: These models are NOT Listed by UL

Accessories

Item	Part Number	Description
DIN Rail	BAP1000	Steel (1m long, 7.5mm high)
	BNDN1000	Aluminum (1m long, 10.5mm high)
End Clip	BNL6	Medium DIN rail end clip

Specifications

Explosion-Protection and Electrical Specifications

Explosion Protection			See Certification Numbers table below	
Degree of Protection			IP20 (IEC60529)	
Installation Location	Discrete Input Barrier		Safe indoor place (non-hazardous area)	
Non-intrinsically Safe Circuit Maximum Voltage (Um)			250V AC 50/60Hz, 250V DC 125V AC 50/60Hz, 125V DC (UL rating)	
Intrinsically Safe Circuits	Wiring Method		1-channel Separate Wiring	16-channel Common Wiring
	Rated Operating Voltage		12V DC ±10%	
	Rated Operating Current		10 mA DC ±20%	
	Maximum Output Voltage (Uo)		13.2V DC	
	Maximum Output Current (Io)		14.2 mA	227.2 mA
	Maximum Output Power (Po)		46.9 mW	750 mW
	Maximum External Inductance (Lo)*		175 (125) mH	0.68 (0.68) mH
	Maximum External Capacitance (Co)*		900 (740) nF	
	Allowable Wiring Resistance (Rw)		300Ω	600/(n+1)Ω (n = number of common channels)
	Maximum Channels per Common Line		–	16
Non-intrinsically Safe Circuits	Relay Output	Contact Configuration	1NO	
		Rated Insulation Voltage (Ui)	250V AC (UL rating: 125V AC), 125V DC	
		Thermal Current (Ith)	3A (common terminal: 8A)	
		Contact Allowable Power – Resistive Load	AC: 750 VA, DC: 72W	
		Contact Allowable Power – Inductive Load	AC: 750 VA (cos ø = 0.3 to 0.4) DC: 48W (L/R = 7 ms)	
		Rated Load – Resistive Load	250V AC 3A, 24V DC 3A	
		Rated Load – Inductive Load	250V AC 3A (cos ø = 0.3 to 0.4) 24V DC 2A (L/R = 7 ms)	
		Minimum Applicable Load	0.1V DC, 0.1 mA (reference value)	
		Contact Resistance	50 mΩ	
		ON Time	12 ms maximum (rated voltage)	
		OFF Time	10 ms maximum (rated voltage)	
		Mechanical Life	20,000,000 operations minimum (at 18,000 operations/hour, without load)	
		Electrical Life	100,000 operations minimum (at 1,800 operations/hour, rated load)	
		Short-circuit Protection	None	
	Transistor Output	Rated Voltage	24V DC	
		Maximum Voltage	30V DC	
		Maximum Current	100 mA (connector type: 15 mA)	
		Leakage Current	0.1 mA maximum	
		Voltage Drop	1V maximum	
		Clamping Voltage	33V (1W)	
		Inrush Current	0.5A maximum (1 sec)	
		ON Time	0.1 ms maximum (resistive load)	
		OFF Time	0.4 ms (typical) (resistive load)	
		Short-circuit Protection	None	

Values in ( ) are those approved by TIIS (Technology Institution of Industrial Safety, Japan).
Note: Um = 125V AC for UL ratings

General Specifications

		AC	DC
Rated Voltage		100 to 240V AC (UL rating: 100 ~ 120V AC)	24V DC
Allowable Voltage Range		85 to 264V AC (UL rating: 85 ~ 125V AC)	21.6 to 26.4V DC
Rated Frequency		50/60 Hz (allowable range: 47 to 63 Hz)	—
Inrush Current		10A (100V AC) 20A (200V AC)	10A
Dielectric Strength (1 minute, 1 mA)		Between intrinsically safe circuit and non-intrinsically safe circuit: 1500V AC	
		Between AC power and output terminal: 1500V AC	
		Between DC power and transistor output terminal: 1000V AC	
Operating Temperature		–20 to +60°C (no freezing)	
Storage Temperature		–20 to +60°C (no freezing)	
Operating Humidity		45 to 85% RH (no condensation)	
Atmosphere		800 to 1100 hPa	
Pollution Degree		2 (IEC60664)	
Insulation Resistance		10 MΩ minimum (500V DC megger, between the same poles as the dielectric strength)	
Vibration Resistance	Damage Limits	Panel mounting: 10 to 55 Hz, amplitude 0.75 mm	
		DIN rail mounting: 10 to 55 Hz, amplitude 0.35 mm	
	Operation Extremes (relay output only)	Panel mounting: 10 to 55 Hz, amplitude 0.5 mm	
		DIN rail mounting: 10 to 55 Hz, amplitude 0.35 mm	
Shock Resistance	Damage Limits	Panel mounting: 500 m/s² (3 times each on X, Y, Z)	
		DIN rail mounting: 300 m/s² (3 times each on X, Y, Z)	
Terminal Style		M3 screw terminal	
Mounting		35-mm-wide DIN rail or panel mounting (M4 screw)	
Power Consumption (approx.)		9.6 VA (EB3C-R10A at 200V AC) 4.8 W (EB3C-R16CD at 24V DC)	
Weight (approx.)		390g (EB3C-R16CD)	

Certification Numbers

Certification Organization	Explosion Protection	Certification Number
UL/FM	Class I, II, III Div. 1 Groups A, B, C, D, E, F and G	3015417 UL file: E234997
	Class I, Zone 0 AEx [ia] IIC	
CSA	Class I Div. 1 Groups A, B, C, D	166730
NEMKO	[Exia] II C	Nemko 02ATEX279
TIIS Japan	Relay barrier: [Exia] II C	TC15753
Class NK	[Exia] II C	02T606
GOST-R	[Exia] II C	РОСС JP.ГБ05.В02067
KOSHA	[Exia] II C	11-AV4BO-0457
CQST	[Exia] II C	CNEx10.2445

Class NK is Japan Shipping agency approval, Class KR is Korean shipping agency approval.

Circuit Diagrams

Internal Circuit Block Diagrams

AC Power, Relay Output Type

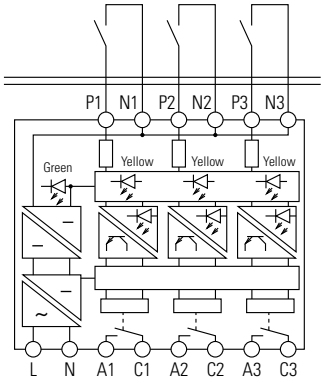

DC Power, Transistor Output Type

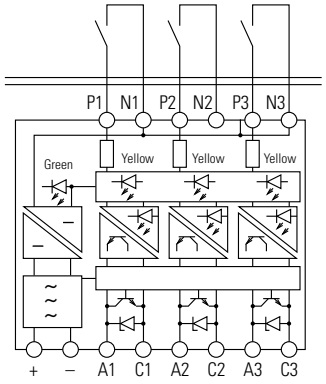

Connector Wiring, Sink Output Type

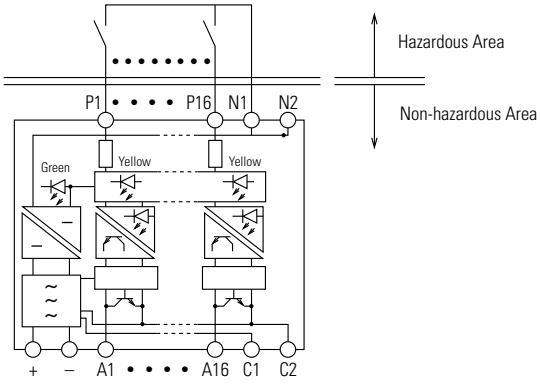

Wiring Examples

External Wiring Examples

Transistor Sink Output Type (Ex.: EB3C-T08CKD)

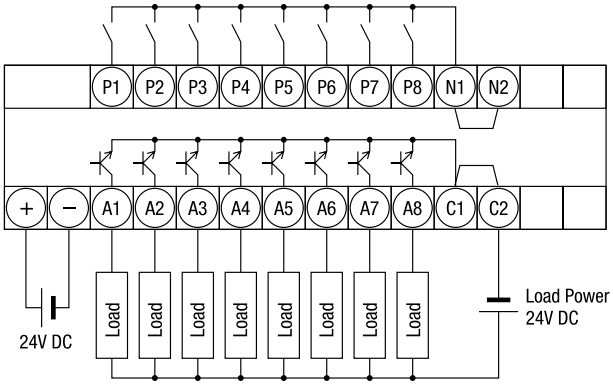

Transistor Source Output Type (Ex.: EB3C-T08CSD)

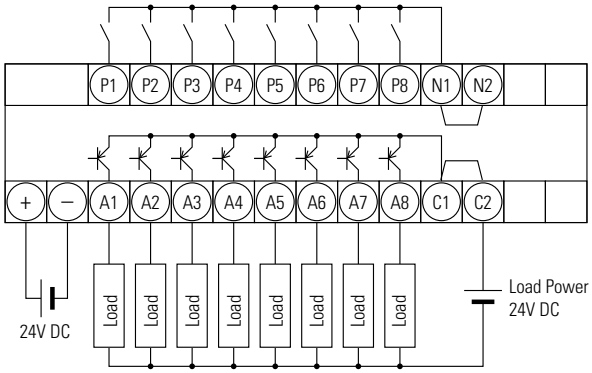

Relay Output Type (Ex.: EB3C-R06A)

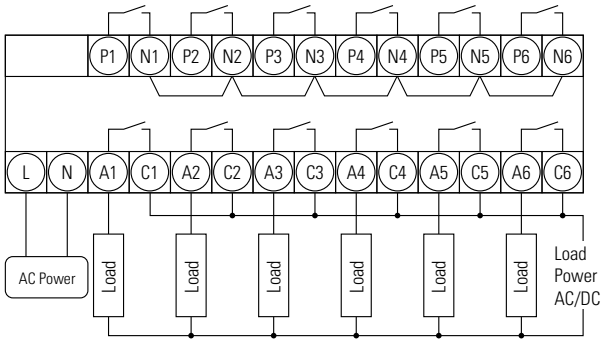

Transistor Output Type (Ex.: EB3C-T06A)

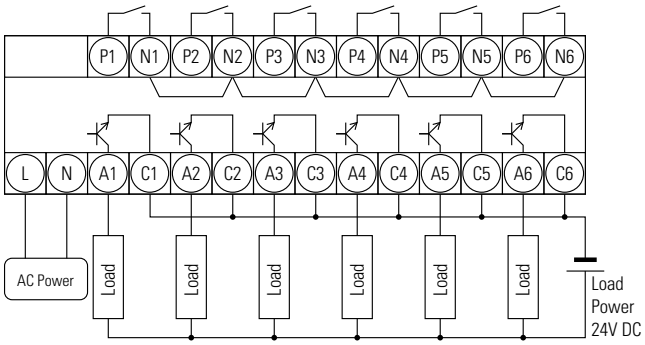

Dimensions (mm)

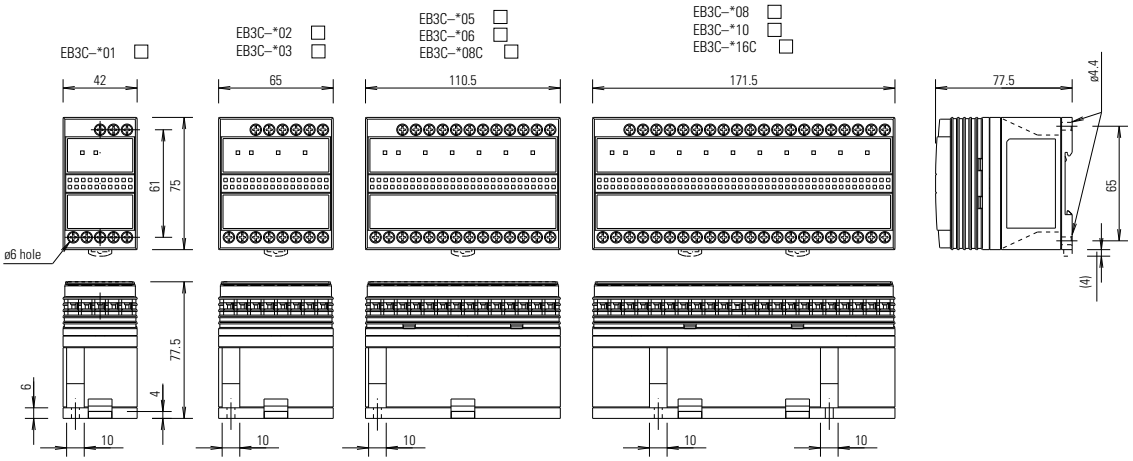

Mounting Hole Layout (Screw Mounting)

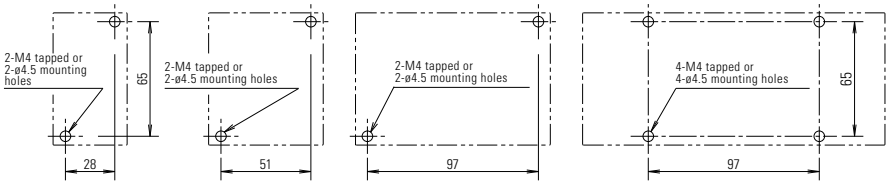

Connector

EB3C–T16C□-C

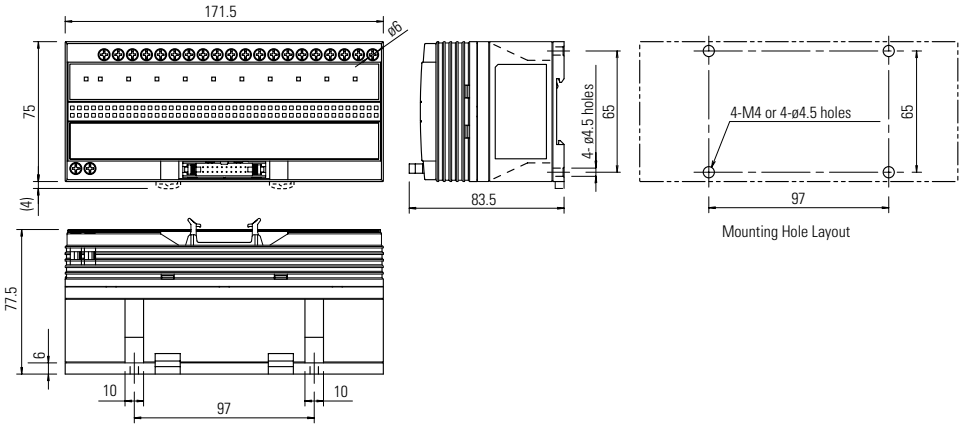

Mounting Hole Layout

Applicable Crimping Terminal

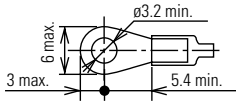

Stripping the Wire End

Solid Wire

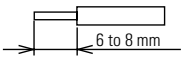

Stranded Wire (Ferrule)

General Information

What is Explosion Protection?

Explosion Mechanism

For an explosion to occur, both hazardous atmosphere (mixture of explosive gas/vapor and air) and ignition source from electrical equipment must exist. The first step for explosion prevention is to prevent the three factors (explosive gas/vapor, air, and ignition source) from existing at the same time.

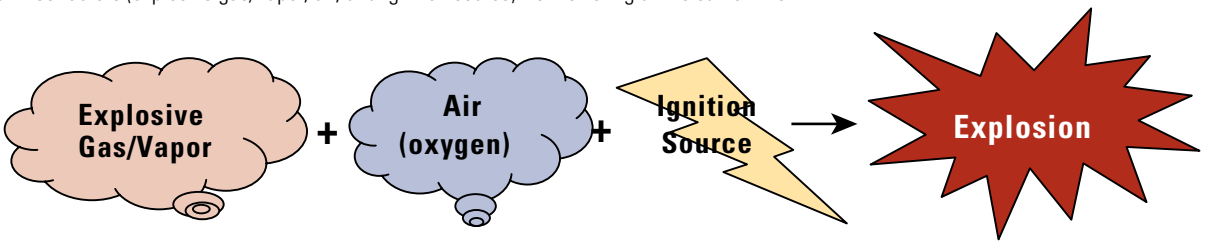

Ignition source: Electrical equipment which originates electrical sparks or has a high temperature, capable of causing ignition in a hazardous atmosphere.

Explosion protection types:

1. Separation of explosive gas/vapor and ignition source
   → Flameproof explosion protection
   → Pressurized explosion protection

2. Low power on ignition source → Intrinsically safe explosion protection

Classification of Hazardous Areas

- Required when selecting explosion protection electrical equipment and wiring methods.
- Determined by user.
- Hazardous areas are classified depending on the frequency of the occurrence of hazardous atmosphere.

IEC Classification

Zone 0: Where hazardous atmosphere may exist for 1,000 hours or longer per year.
Zone 1: Where hazardous atmosphere may exist for 10 to 1,000 hours per year.
Zone 2: Where hazardous atmosphere may exist for less than 1 hour per year.

Gasoline Tank Example

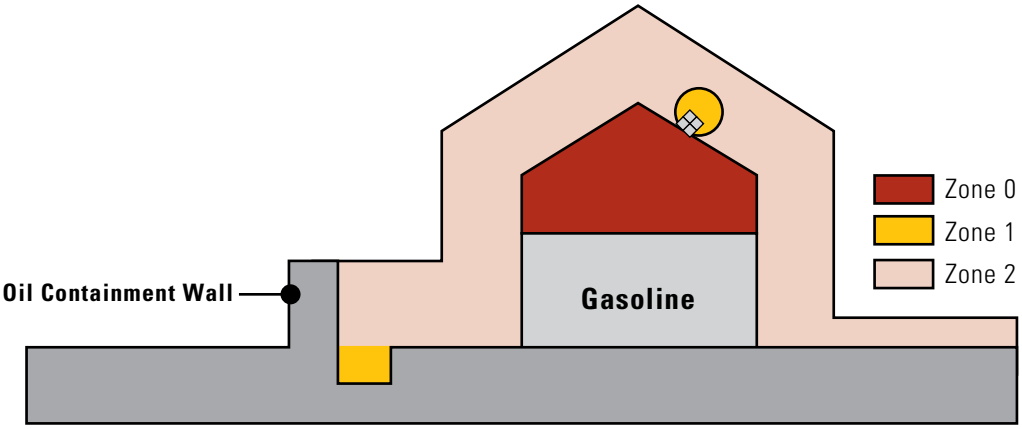

Explosion Protection Types

Intrinsically Safe Structure

- Structure in which voltage and current are limited so that no sparks, arc, and thermal effect produced by electric equipment (switch, pilot light, etc) in hazardous areas are capable of causing ignition of explosive gas/vapor.

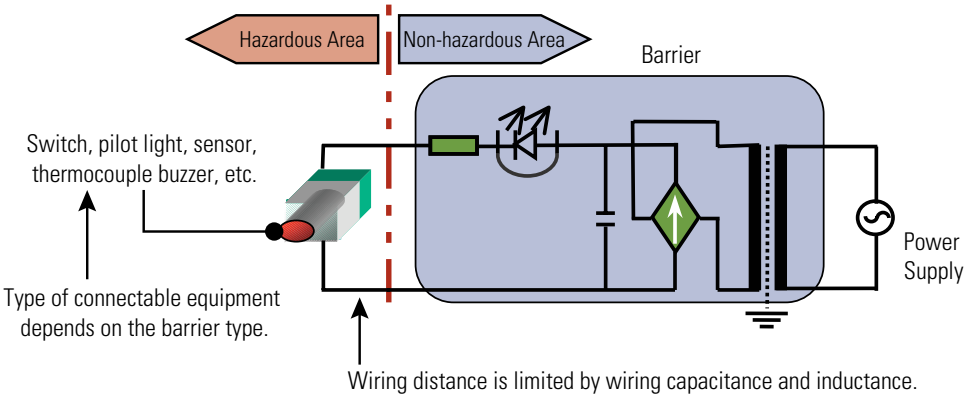

Features:

- Barrier is installed in non-hazardous area, and is connected to the switches or pilot lights in hazardous area.
- The intrinsically safe system can be used in zone 0.
- Because voltage and current to the electric equipment are limited, the variety of devices that can be connected to the barrier is restricted.
- Wiring is required between hazardous and non-hazardous areas.
- Grounding (grounding resistance 10Ω max.) may be required (EB3C, EB3L do not require grounding).

Grounding - The procedure to achieve required resistance value by inserting a grounding wire into a hole in the ground and furnishing the surrounding with material of superior electrical conductivity.

Non-insulated barrier (Zener barrier): grounding resistance 10Ω max.

- While the voltage difference between the circuits is limited in Zener barriers, the voltage difference between the circuits and grounding is unlimited. When a short-circuit occurs between the circuits and ground, high voltage/current may be generated in the circuits, causing a possible explosion. The 0V line of circuits, therefore, must be provided with grounding (resistance 10Ω max.) so that the voltage/current can be shunted to the ground.

Insulated barrier: grounding resistance 100Ω max.

- Intrinsically safe and non-intrinsically safe parts are electrically isolated by an isolation transformer. If a sufficient isolation distance is not provided on the isolation transformer, however, the transformer may short-circuit between primary and secondary when an abnormal voltage occurs. This may generate high voltage/current in the intrinsically safe circuit, causing a possible explosion. A transformer with metallic isolator must be used between primary and secondary, and grounding (resistance 100Ω max.) must be provided.

Difference between NI (Non-incendive) & IS (Intrinsic Safety)

Standard

- NI: Installed in areas that are Zone 2 hazardous locations.
- IS: Installed in areas that are non-hazardous.

Advantages & Disadvantages

- NI: Small and inexpensive. Devices connected with NI are also installed only in the Zone 2 area.
- IS: Small but more expensive. Devices connected with IS can be used in the Zone 0, 1 and 2 areas (all zones).

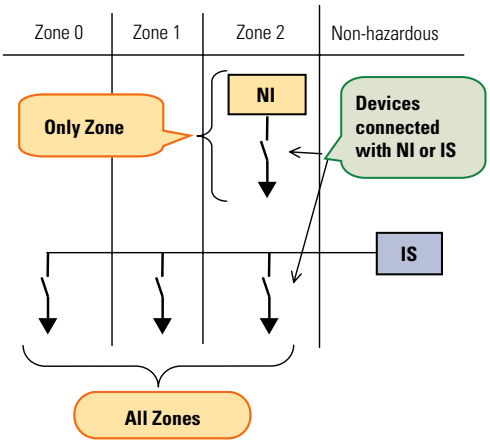

Structure

NI Structure

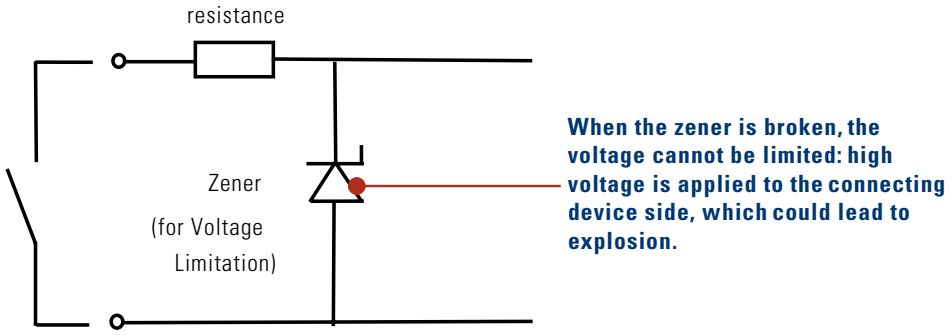

IS Structure

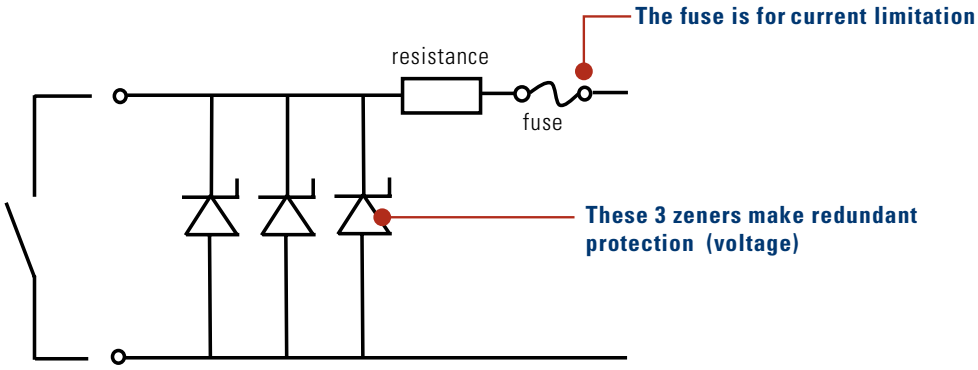

Note : Instead of zeners, thyristors are used in EB3C for better energy effeciency.

Explosion Protection Marking

Gas is categorized into groups by explosiveness and ignition temperature.

Technical standard: Determines the gas type which can be used with the apparatus.

Ex ia IIC T6

Temperature: maximum surface temperature of electrical equipment
T1: 450°C
T2: 300°C
T3: 200°C
T4: 135°C
T5: 100°C
T6: 85°C

Electrical Equipment:
IIA: Applicable to group IIA gas
IIB: Applicable to groups IIA and IIB gasses
IIC: Applicable to groups IIA, IIB, and IIC gasses

Explosion Protection:
d: Flameproof type
e: Increased safety type
p: Pressurized type
ia, ib: Intrinsic safety type
de: Flameproof and increased safety type
d(ia): Intrinsic safety and flameproof type

Shows compliance with the standard

Examples: ExdeIIBT4, EXeIICT4, ExpIIBT4, ExiaIICT5

EB3C/EB3L Features

Small and lightweight

EB3C (10-circuit)	Weight: 380g Dimensions: 171.5 L × 75 W × 77.5 H (mm)		• Plastic housing • Small system design
EB3L (10-circuit)	Weight: 360g Dimensions: 171.5 L × 75 W × 77.5 H (mm)		

No grounding required: less labor, less cost

No explosion protection grounding.

Isolation transformer is used. All isolations – not only between primary and secondary, but also cores and bobbins – are reinforced.

↓

No isolator = No grounding

No electrical equipment grounding.

Power supply part:	Electric shock is prevented with reinforced isolation. Conforms to IEC standard.
Output part:	The small power & EMC design requires no grounding. Conforms to IEC switch output standard.

Shield wire treatment
Shield wires of intrinsically safe circuits are grounded to the panel in non-hazardous area, and not connected to the N terminal on the barrier.

Common Type and Connector Type

1. Common type → For 8 and 16 circuits. Easy connection to PLC.
2. Connector type
   - Flat cable connection between non-intrinsically safe part and PLC.
   - Connectable to IDEC's FC5A, FC4A and Mitsubishi's AIS.

Standards

1. CE
   Conforms to EMC directive and LVD.
   EMC directive:
   Electromagnetism generated by the barrier does not affect other communication equipment. Also, electromagnetism generated by other communication equipment does not affect the barrier.
   LVD (Low Voltage Directive):
   For rated voltages 50 to 1000V AC, 75 to 1500V DC.
2. ATEX
   Adopted by EU, this directive covers electrical and mechanical equipment and protective systems, which may be used in potentially explosive atmospheres (Europe). EN50014 series is adopted.
3. FM (Factory Mutual Approval)
   A private US certification organization for waterproof and intrinsic safety. Widely recognized for more intrinsic safety than UL.
4. CSA (Canadian Standards Association)
   A Canadian certification organization for electrical equipment.
5. NK: Class NK (Nippon Kaiji Kyokai)
   Required for ships with Japanese ship registration.
6. Underwriters Laboratories (UL) - A US certification agency for all electrical and hazardous location products.

Less labor

1. Finger-safe spring-up terminal
   The finger-safe, captive spring-up terminals prevent electric shock (IP20), and make installation easy. No screw loss.
2. Universal voltage
   100 to 240V AC (UL rating 100 ~ 120VAC).
3. Installation
   Direct and DIN-rail mountable.

EB3 series: Screws cannot be touched by fingers even when loosened.

Switches connectable to EB3C

Switches which are configured only with mechanical contacts (dry contacts) can be connected to the EB3C.

Pushbutton, selector, cam, toggle, limit, micro, reed, foot, pressure, and temperature switches can be used.

Note: Contact rating must be 13.2V, 14.2 mA minimum. Contact material such as silver oxide cadmium and silver tungsten may cause conduction failure at 10 mA due to the film generated on the surface.

Equipment connectable to EB3L

Common wiring: Only EB3P-L type pilot lights, which have been approved, can be connected to the EB3L discrete output barrier.

Separate wiring: No approval is required for pilot lights and buzzers to be connected to the EB3L discrete output barrier. However, users must make sure that the temperature rise of the equipment is below the rated value with the current and voltage supplied from the discrete input barrier. Also take the ratings of intrinsically safe circuit into consideration. IDEC's EB3P-L type pilot light lights and EB3P-Z type buzzers satisfy the ratings.

EB3P-L Pilot light: ø22 and ø30, a total of 78 types
- Super LED installed
- Lens colors: amber, blue, green, red, white, and yellow
- Accessories and maintenance parts are the same as standard control units. See IDEC's control units catalogs.

ø30: APN, UPQN equivalent
ø22: APW, HW,LW,UPQW equivalent

IPL1 Miniature pilot light: ø6, ø8, and ø10, a total of 40 types
- Low price
- Illumination colors: amber, green, red, white, and yellow

EB3P-Z buzzer: Continuous and intermittent sound, ø30 mounting hole, terminal block type
- Degree of protection: IP20
- Common wiring is not available due to high inductance value.
- Approved by TIIS only

When connecting one buzzer and 15 pilot lights to EB3L-S16CSD, do not connect the negative lines of buzzer and pilot lights in common. Connect the buzzer and pilot lights to the barrier using separate lines (15 pilot lights can be wired with one common line).

Connecting Illuminated Switches

Made possible with the combination of EB3L and EB3C.

User benefits

- Flexibility of control panel design
  Explosion protected panels can be designed in a similar manner to non-explosion protected panels (non-explosion protected panels can be used as explosion protected panels without any changes).
- Control panel becomes smaller.

Connectable illuminated switch: 134 types

EB3P-LB Illuminated Pushbutton Switch	ø30: ALN2 equivalent ø22: ALW2, HW, LW equivalent
EB3P-LS Illuminated Selector Switch	ø30: ASLN equivalent ø22: ASLW, HW, LW equivalent

Super LED installed.

Lens color: amber, blue, green, red, white, yellow

Connection Method

1. Difference between EB3C and EB3L

EB3C: ON/OFF output signals to other equipment.
→ Connection to PLC's inputs.

EB3L: ON/OFF input signals to pilot lights and buzzers.
→ Connection from PLC's outputs.

2. Sink and Source
   Available combination: Sink Output + Source Input or Source Output + Sink Input. Sink output (source input) is mainly adopted in Japan (Europe: source output).

Other information

- Up to 16 channels, including both pilot lights and contacts, can be connected in common wiring.
- Connect the common wires of pilot lights and contacts separately to the N terminals of each barrier.
- Use two wires to connect the common terminals (N terminals) EB3C and EB3L barriers.
- Accessories and maintenance parts are the same as the standard control units. See IDEC's control units catalogs for details.

Safety Precautions

Electrostatic protection: Prevention of fire ignition and explosion caused by electrostatic charges.

- As required by IEC60079-11, limit the exposed surface of plastic equipment (switch, pilot light) installed in hazardous areas.
- 20 cm^2 max. for IIC gas atmosphere.
- 100 cm^2 max. for IIB and IIA gas atmosphere.
- When the surface area of other than operating parts exceeds the limit, attach a caution plate.
- Pushbutton, knob, or other parts which are frequently touched by operators.

EB3C Separate and Common Types

1. Separate Wiring Type
   The output circuit is isolated for each channel. Both sink and source outputs can be connected.

2. Common Wiring Type
   The output circuit is not isolated from each other and uses common terminal C. Sink and source outputs are available on different modules.

Sink/Source Definition

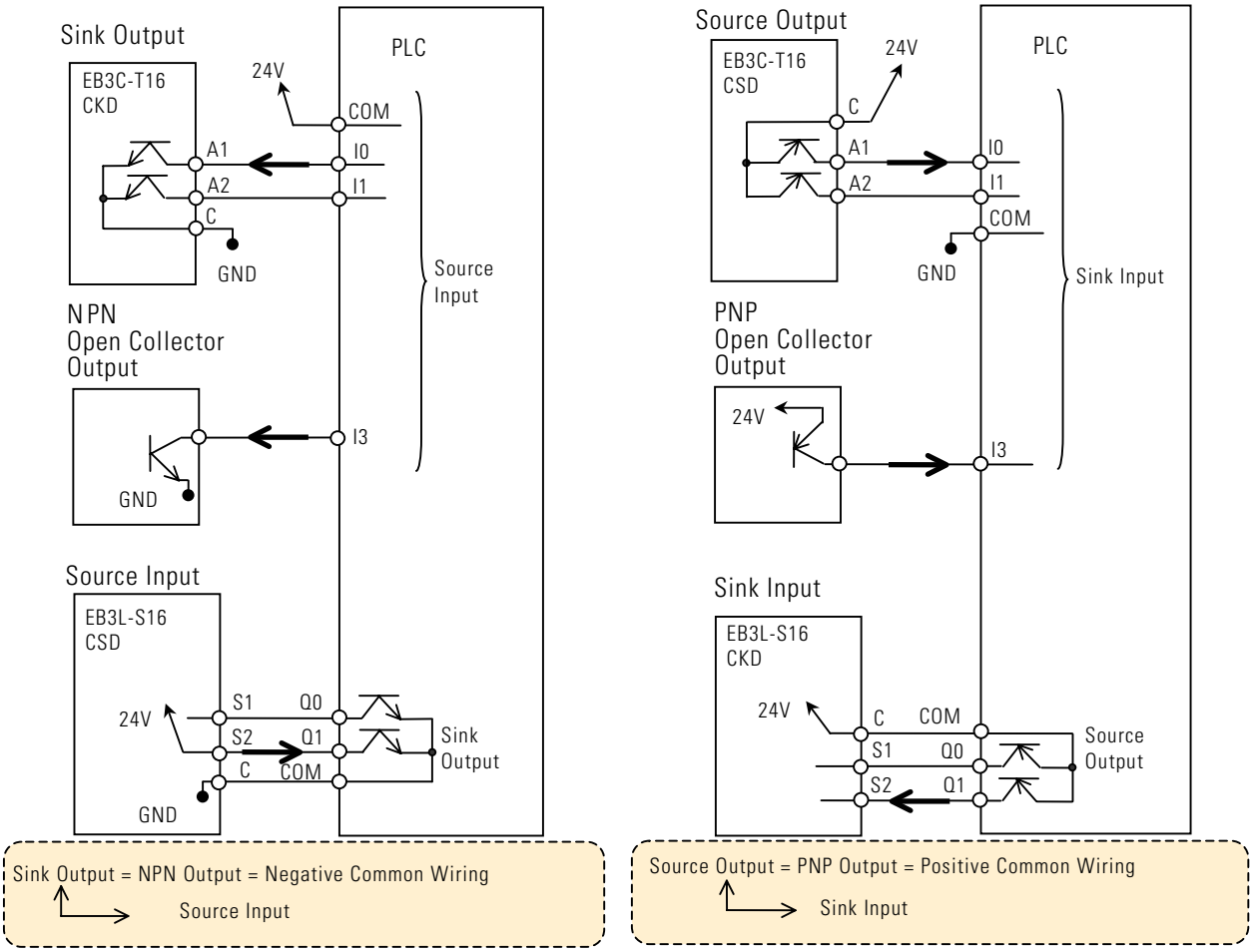

Relay Terminal Block

When connecting a discrete input barrier to the switches and pilot lights installed in hazardous area, use a relay terminal block.

↓

A relay terminal block can be eliminated when using EB3C and EB3L, as these barriers are considered as relay terminal blocks.

Cable Extension and Intrinsic Safety Parameter

- For wiring between the barrier and the switches and pilot lights installed in hazardous area, use a cable of 2.0 mm^2.
  The cable can be extended up to approximately 1 km.
- For EB3L of common wiring type, use a cable of 2.0 mm^2 . The cable can be extended up to approximately 600 m. Longer cables cause dim LED lighting.

Make sure that wiring parameters (inductance, capacitance, resistance) do not exceed the maximum limit.

Noise Countermeasure

- The LED connected to the EB3L may blink due to noises.
- Check the wiring so that noise is not imposed on the EB3L (eg. separation from power line).
- Noise can be avoided also by inserting a noise filter for AC line into the barrier's power input part.

Recommended noise filters:

DENSEI-LAMBDA		TDK	Schaffner
MBW-1202-22	PBF-1202-22	ZCB2203-11	FN670-3/06
MBW-1203-22	PBF-1203-22	ZCB2206-11	
MBW-1206-22	PBF-1206-22		