AC Current Transducer DCSA Series Loop Powered

TEN YEAR 10 WARRANTY

- Mounts on DIN 1 or DIN 3 Rail
- 0 ... 50 A in 4 Ranges using LCSC10T12 Sensor
- Loop Powered from 10 ... 30 V DC
- Linear Output from 4 ... 20 mA, 1 ... 10 V DC
- Zero and Span Adjustments
- Separate Sensor & Control Unit

Description

The DCSA Series is a loop powered, linear output current transducer that provides an output that is directly proportional to the RMS AC current passing through the LCSC10T12 sensor. The DCSA provides either an analog current or voltage: 4 to 20 mA, 1 to 5 V DC, or 2 to 10 V DC. Each unit is factory calibrated for monitoring (with the LCSC10T12 connected) from 0 to 5, 0 to 10, 0 to 20, or 0 to 50 A in four ranges. Zero and span adjustments allow field calibration if needed. The DCSA mounts on both DIN 1 and DIN 3 rails.

Operation

The DCSA varies the effective resistance of its output in direct proportion to the current flowing in the conductor monitored by the LCSC10T12. Connecting terminals C & D provides a 4 to 20 mA DC current. Connect the power supply to terminals C & A to get 1 to 5 V DC at terminal D. Connect the power supply to terminals C & B to get 2 to 10 V DC at terminal D.

- Approvals: - Pending

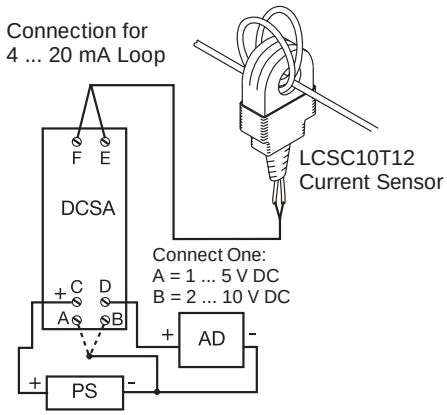

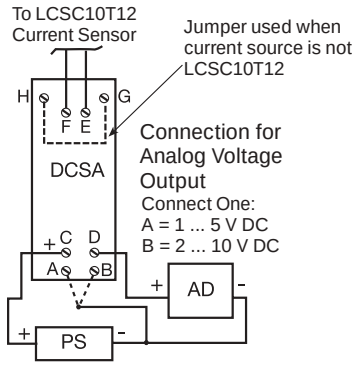

AD = Instrument, Meter, or PLC Input
PS = Power Supply

Current Range with LCSC10T12	DCSA Input Range (F to E)	Part Number
0 ... 5 A	0 ... 5 mA AC	DCSA5
0 ... 10 A	0 ... 10 mA AC	DCSA10
0 ... 20 A	0 ... 20 mA AC	DCSA20
0 ... 50 A	0 ... 50 mA AC	DCSA50
	Toroidal Sensor	LCSC10T12

Technical Data

DCSA Current Transducer		
Input		
Ranges (without LCSC10T12 connected)		
4 factory calibrated ranges in mA AC		0...5 mA, 0...10 mA, 0...20 mA, or 0...50 mA AC
Factory Calibration		+/-0.5% of full scale
Repeat Accuracy		+/-0.25% of full scale under fixed conditions
Response Time		≅ 300 ms
Temperature Coefficient		+/-0.05%/°C
Input To Output		Not isolated
Output		
Type: Analog		Current directly proportional to input current
Range		4 ... 20 mA; or 1 ... 5 V DC or 2 ... 10 VDC
Supply Voltage*		10 ... 30 V DC
Momentary Voltage		40 V DC for 1 m
Zero Adjust		≅ 3.75 ... 4.25 mA
Span Adjust		18 mA ... 22 mA
Adjustment		Mini-screw, multi-turn potentiometer
Protection		
Dielectric Breakdown		≥ 2500 V RMS terminals to mounting surface
Insulation Resistance		≥ 100 MΩ
Polarity		Units are reverse polarity protected
Mechanical		
Mounting		DIN 1 & DIN 3 rail mounting
Termination	Wire clamp	For 22 ... 14 AWG (.336 mm² ... 2.5 mm²)
Environmental		
Operating Temperature		-30°C ... +60°C
Storage Temperature		-40°C ... +85°C
Humidity		95% relative, non-condensing
Weight	DCSA	≅ 1.6 oz (45.4 g)
LCSC10T12 Toroidal Sensor		
Number of Turns		1000
Nominal Output Current Full Range		0 ... 50 mA
Maximum Allowable Current		Steady – 50 A turns Inrush – 300 A turns for 10 s
Burden		≤0.5 VA
Frequency	0 ... 20A / 21 ... 50A	20 ... 100 Hz / 30 ... 100 Hz
Sensor Hole		0.36 in. (9.14 mm) for up to #4 AWG (21.1 mm²) THHN wire
Weight	LCS	≅ 1 oz (28.3 g)

*Minimum loop power supply voltage equals the minimum sensor voltage 10 V DC plus the voltage drop developed across all the other loop devices at 20 mA.

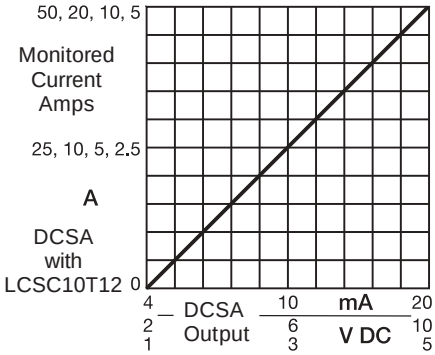

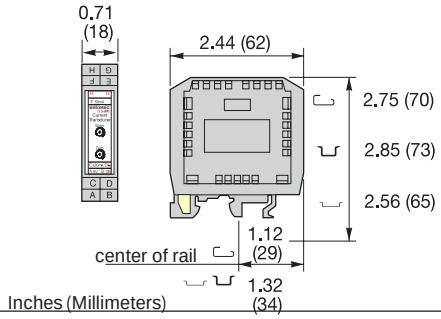

Current Sensor LCSC10T12