受控 CONTROLLED DOCUMENT					
编号 P/N	CPAD705-CUST	版本 Rev	01	日期 Rel'd Date	SEP 14,09

DRAWING NO.
CPAD705-CUST

REVISIONS

01	OFFICAL RELEASE				
	08-17-09	J J	T W	T	Betty 2009.09.0 8 08:56:52 +08'00' ©

Description:	75 Ohm BNC T adapter (274U)	
Part No:	CPAD705	
Application:	Adapter	
Crimp Tool:	N/A	
Impedance:	75 Ohms	
Frequency Range:	0-2 GHz	
Material:	Body	Zinc Nickel plated
	Contact	Brass Gold plated
	Insulator	Tpx
	Nut	Zinc Nickel plated
RoHS Compliance:	Yes	
Technical Detail:	Refer to Emerson Document P/N 27-0000	

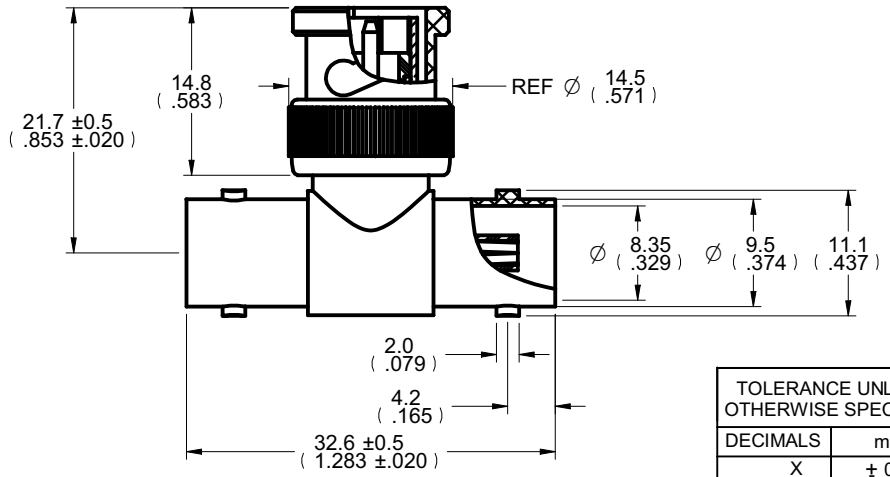

DIM OUTLINE

CUSTOMER COPY

TOLERANCE UNLESS OTHERWISE SPECIFIED		DRAWN BY JEAN.JIN	DATE 08-17-09
DECIMALS	mm	CHECKED BY TERRY.W	DATE 08-17-09
X	± 0.5		
X.X	± 0.2	APPROVED BY THOMAS	DATE 08-17-09
X.XX	± 0.1		
ANGLES	± 0.5°	U/M mm	

THIS DRAWING WAS PRODUCED BY COMPUTER, DO NOT SCALE DRAWING OR UPDATE MANUALLY.

cinch CONNECTIVITY SOLUTIONS a bel group

TITLE
75 OHM BNC T ADAPTER (274U)

SHEET	DRAWING NO.	SIZE
1 OF 1	CPAD705-CUST	A