KEMET Part Number: C315C103J5R5TA

GoldMax 300 Comm X7R, Ceramic, 0.01 uF, 5%, 50 VDC, X7R, GoldMax, Commercial Standard, Lead Spacing = 2.54mm

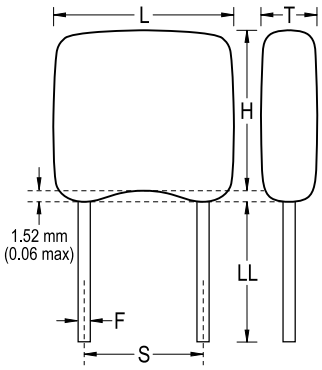

General Information	
Series:	GoldMax 300 Comm X7R
Style:	Radial
Description:	GoldMax, Commercial Standard
RoHS:	Yes
Termination:	Tin
Failure Rate:	N/A
AEC-Q200:	No
Halogen Free:	Yes

Dimensions	
L	3.81mm MAX
H	3.14mm MAX
T	2.54mm MAX
S	2.54mm +/-0.78mm
LL	7mm MIN
F	0.51mm +0.1/-0.025mm

Packaging Specifications	
Packaging:	Bulk, Bag
Packaging Quantity:	500

Specifications	
Capacitance:	0.01 uF
Measurement Condition:	1 kHz 1.0Vrms
Capacitance Tolerance:	5%
Voltage DC:	50 VDC
Dielectric Withstanding Voltage:	125 VDC
Temperature Range:	-55/+125°C
Temperature Coefficient:	X7R
Capacitance Change with Reference to +25°C and 0 VDC Applied (TCC):	0.15, 1kHz 1.0Vrms
Dissipation Factor:	2.5% 1 kHz 1.0Vrms
Aging Rate:	3% Loss/Decade Hour
Insulation Resistance:	100 GOhms

Statements of suitability for certain applications are based on our knowledge of typical operating conditions for such applications, but are not intended to constitute - and we specifically disclaim - any warranty concerning suitability for a specific customer application or use. This Information is intended for use only by customers who have the requisite experience and capability to determine the correct products for their application. Any technical advice inferred from this Information or otherwise provided by us with reference to the use of our products is given gratis, and we assume no obligation or liability for the advice given or results obtained.

© 2006 - 2022 KEMET