KEMET Part Number: C1210C333KCRACTU

(C1210C333KCRAC7800)

SMD Comm X7R HV, Ceramic, 0.033 uF, 10%, 500 VDC, X7R, SMD, MLCC, High Voltage, Temperature Stable, 1210

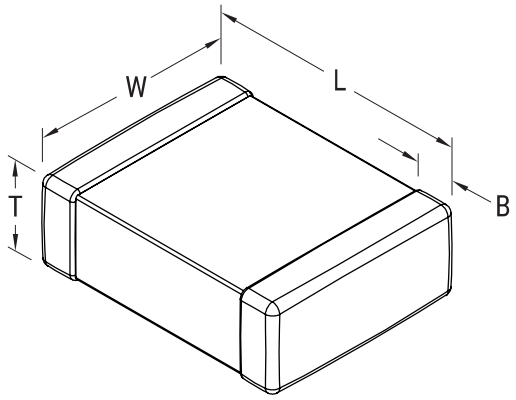

General Information	
Series:	SMD Comm X7R HV
Style:	SMD Chip
Description:	SMD, MLCC, High Voltage, Temperature Stable
Features:	High Voltage
RoHS:	Yes
Termination:	Tin
Marking:	No
AEC-Q200:	No
Component Weight:	85 mg
Shelf Life:	78 Weeks
MSL:	1

Dimensions	
Chip Size	1210
L	3.2mm +/-0.2mm
W	2.5mm +/-0.2mm
T	1.7mm +/-0.20mm
B	0.5mm +/-0.25mm

Packaging Specifications	
Packaging:	T&R, 180mm, Plastic Tape
Packaging Quantity:	2000

Specifications	
Capacitance:	0.033 uF
Measurement Condition:	1 kHz 1.0Vrms
Capacitance Tolerance:	10%
Voltage DC:	500 VDC
Dielectric Withstanding Voltage:	750 VDC
Temperature Range:	-55/+125°C
Temperature Coefficient:	X7R
Capacitance Change with Reference to +25°C and 0 VDC Applied (TCC):	15%, 1kHz 1.0Vrms
Dissipation Factor:	2.5% 1 kHz 1.0Vrms
Aging Rate:	3% Loss/Decade Hour: Referee Time is 1000 Hours
Insulation Resistance:	3.0303 GOhms

Statements of suitability for certain applications are based on our knowledge of typical operating conditions for such applications, but are not intended to constitute - and we specifically disclaim - any warranty concerning suitability for a specific customer application or use. This Information is intended for use only by customers who have the requisite experience and capability to determine the correct products for their application. Any technical advice inferred from this Information or otherwise provided by us with reference to the use of our products is given gratis, and we assume no obligation or liability for the advice given or results obtained.

© 2006 - 2022 KEMET