# KEMET Part Number: C1206C104J5RACTU

(C1206C104J5RAC7800)

SMD Comm X7R, Ceramic, 0.1 uF, 5%, 50 VDC, X7R, SMD, MLCC, Temperature Stable, Class II, 1206

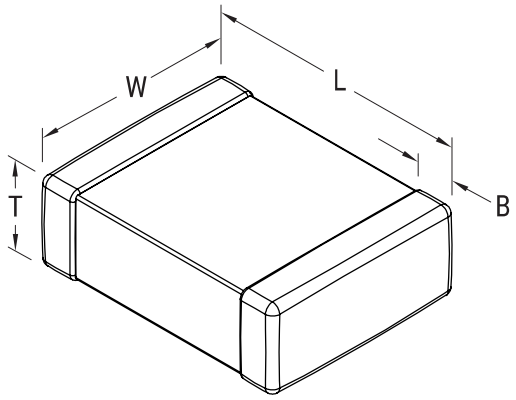


| General Information | |
|---|---|
| **Series:** | SMD Comm X7R |
| **Style:** | SMD Chip |
| **Description:** | SMD, MLCC, Temperature Stable, Class II |
| **Features:** | Temperature Stable, Class II |
| **RoHS:** | Yes |
| **Termination:** | Tin |
| **Marking:** | No |
| **AEC-Q200:** | No |
| **Component Weight:** | 17 mg |
| **Shelf Life:** | 78 Weeks |
| **MSL:** | 1 |

| Dimensions | |
|---|---|
| **Chip Size** | 1206 |
| **L** | 3.2mm +/-0.2mm |
| **W** | 1.6mm +/-0.2mm |
| **T** | 0.78mm +/-0.10mm |
| **B** | 0.5mm +/-0.25mm |

| Specifications | |
|---|---|
| **Capacitance:** | 0.1 uF |
| **Measurement Condition:** | 1 kHz 1.0Vrms |
| **Capacitance Tolerance:** | 5% |
| **Voltage DC:** | 50 VDC |
| **Dielectric Withstanding Voltage:** | 125 VDC |
| **Temperature Range:** | -55/+125°C |
| **Temperature Coefficient:** | X7R |
| **Capacitance Change with Reference to +25°C and 0 VDC Applied (TCC):** | 15%, 1kHz 1.0Vrms |
| **Dissipation Factor:** | 2.5% 1 kHz 1.0Vrms |
| **Aging Rate:** | 3% Loss/Decade Hour: Referee Time is 1000 Hours |
| **Insulation Resistance:** | 10 GOhms |

| Packaging Specifications | |
|---|---|
| **Packaging:** | T&R, 180mm, Plastic Tape |
| **Packaging Quantity:** | 4000 |

Statements of suitability for certain applications are based on our knowledge of typical operating conditions for such applications, but are not intended to constitute - and we specifically disclaim - any warranty concerning suitability for a specific customer application or use. This Information is intended for use only by customers who have the requisite experience and capability to determine the correct products for their application. Any technical advice inferred from this Information or otherwise provided by us with reference to the use of our products is given gratis, and we assume no obligation or liability for the advice given or results obtained.



© 2006 - 2022 KEMET