# KEMET Part Number: C0603C470J5GACTU

(C0603C470J5GAC7867)

SMD Comm C0G, Ceramic, 47 pF, 5%, 50 VDC, C0G, SMD, MLCC, Ultra-Stable, Low Loss, Class I, 0603

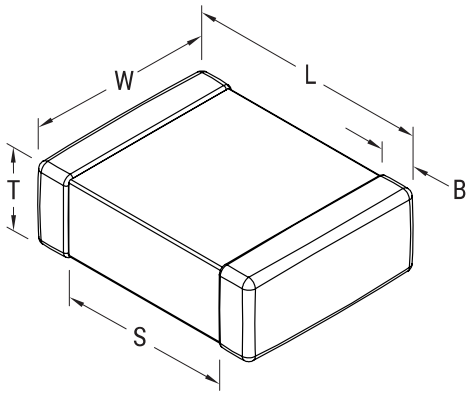


| General Information | |
|---|---|
| **Series:** | SMD Comm C0G |
| **Style:** | SMD Chip |
| **Description:** | SMD, MLCC, Ultra-Stable, Low Loss, Class I |
| **Features:** | Ultra-Stable, Low Loss, Class I |
| **RoHS:** | Yes |
| **Termination:** | Tin |
| **Marking:** | No |
| **AEC-Q200:** | No |
| **Component Weight:** | 3700 ug |
| **Shelf Life:** | 78 Weeks |
| **MSL:** | 1 |

| Dimensions | |
|---|---|
| **Chip Size** | 0603 |
| **L** | 1.6mm +/-0.15mm |
| **W** | 0.8mm +/-0.15mm |
| **T** | 0.8mm +/-0.07mm |
| **S** | 0.7mm MIN |
| **B** | 0.35mm +/-0.15mm |

| Packaging Specifications | |
|---|---|
| **Packaging:** | T&R, 180mm, Paper Tape |
| **Packaging Quantity:** | 4000 |

| Specifications | |
|---|---|
| **Capacitance:** | 47 pF |
| **Measurement Condition:** | 1 MHz 1.0Vrms |
| **Capacitance Tolerance:** | 5% |
| **Voltage DC:** | 50 VDC |
| **Dielectric Withstanding Voltage:** | 125 VDC |
| **Temperature Range:** | -55/+125°C |
| **Temperature Coefficient:** | C0G |
| **Capacitance Change with Reference to +25°C and 0 VDC Applied (TCC):** | 30 ppm/C, 1MegaHz 1.0Vrms |
| **Dissipation Factor:** | 0.1% 1 MHz 1.0Vrms |
| **Aging Rate:** | 0% Loss/Decade Hour |
| **Insulation Resistance:** | 100 GOhms |

Statements of suitability for certain applications are based on our knowledge of typical operating conditions for such applications, but are not intended to constitute - and we specifically disclaim - any warranty concerning suitability for a specific customer application or use. This Information is intended for use only by customers who have the requisite experience and capability to determine the correct products for their application. Any technical advice inferred from this Information or otherwise provided by us with reference to the use of our products is given gratis, and we assume no obligation or liability for the advice given or results obtained.



© 2006 - 2022 KEMET