KEMET Part Number: C0402C100J5GACTU

(C0402C100J5GAC7867)

SMD Comm C0G, Ceramic, 10 pF, 5%, 50 VDC, C0G, SMD, MLCC, Ultra-Stable, Low Loss, Class I, 0402

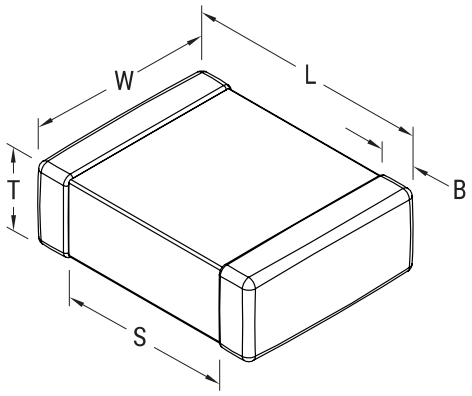

General Information	
Series:	SMD Comm C0G
Style:	SMD Chip
Description:	SMD, MLCC, Ultra-Stable, Low Loss, Class I
Features:	Ultra-Stable, Low Loss, Class I
RoHS:	Yes
Termination:	Tin
Marking:	No
AEC-Q200:	No
Component Weight:	1060 ug
Shelf Life:	78 Weeks
MSL:	1

Dimensions	
Chip Size	0402
L	1mm +/-0.05mm
W	0.5mm +/-0.05mm
T	0.5mm +/-0.05mm
S	0.3mm MIN
B	0.3mm +/-0.1mm

Packaging Specifications	
Packaging:	T&R, 180mm, Paper Tape
Packaging Quantity:	10000

Specifications	
Capacitance:	10 pF
Measurement Condition:	1 MHz 1.0Vrms
Capacitance Tolerance:	5%
Voltage DC:	50 VDC
Dielectric Withstanding Voltage:	125 VDC
Temperature Range:	-55/+125°C
Temperature Coefficient:	C0G
Capacitance Change with Reference to +25°C and 0 VDC Applied (TCC):	30 ppm/C, 1MegaHz 1.0Vrms
Dissipation Factor:	0.1% 1 MHz 1.0Vrms
Aging Rate:	0% Loss/Decade Hour
Insulation Resistance:	100 GOhms

Statements of suitability for certain applications are based on our knowledge of typical operating conditions for such applications, but are not intended to constitute - and we specifically disclaim - any warranty concerning suitability for a specific customer application or use. This Information is intended for use only by customers who have the requisite experience and capability to determine the correct products for their application. Any technical advice inferred from this Information or otherwise provided by us with reference to the use of our products is given gratis, and we assume no obligation or liability for the advice given or results obtained.

© 2006 - 2022 KEMET