MICRO SWITCH
FREEPORT ILLINOIS, U.S.A
A DIVISION OF HONEYWELL
FED. MFG. CODE 91929

SWITCH – BASIC

CATALOG LISTING
BZ-RX53-B7

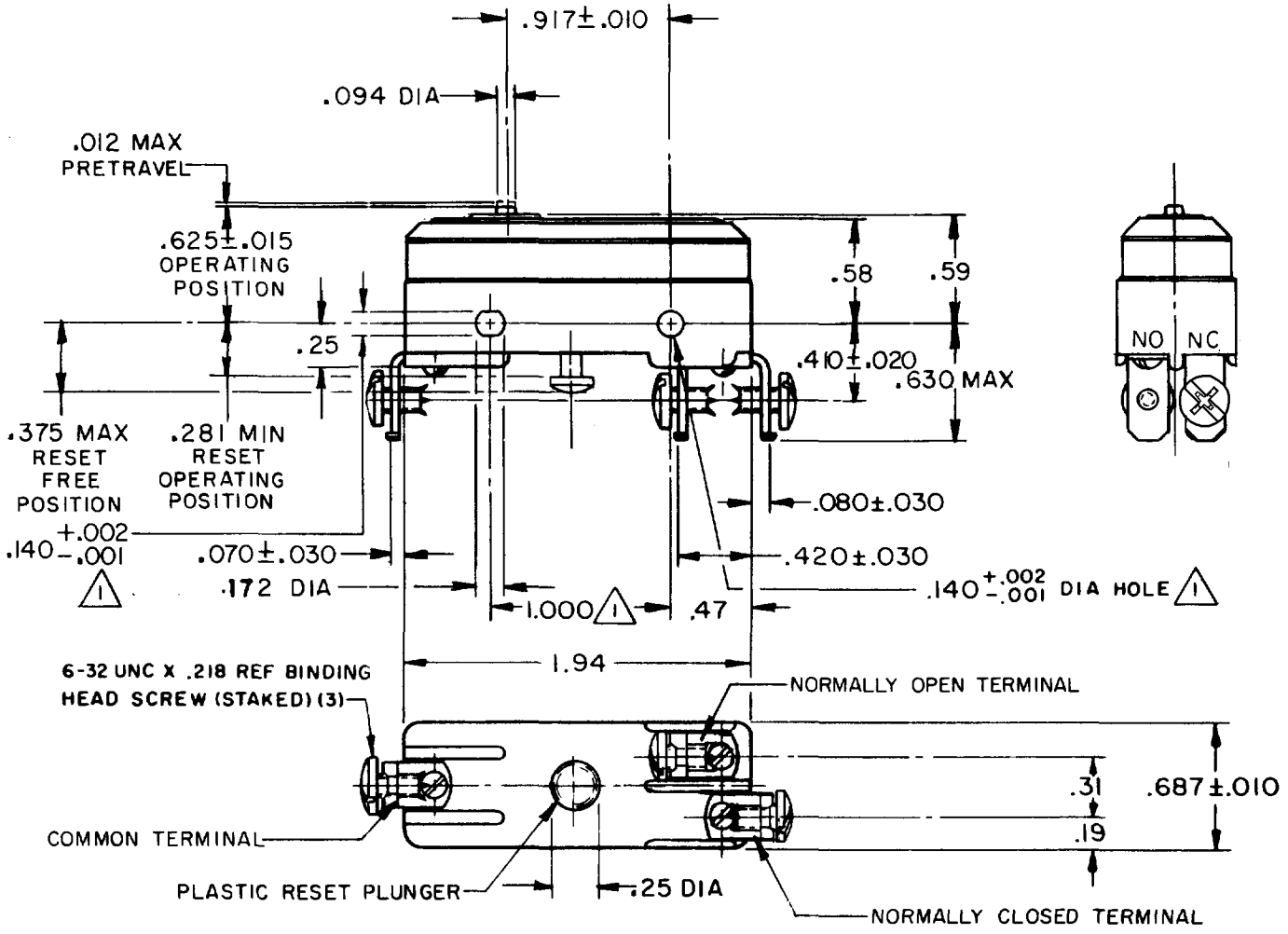

NOTE –
1 MOUNTING HOLES WILL ACCEPT PINS OR SCREWS OF .139 MAX DIA ON 1.000±.002 CENTERS

THIS DRAWING COVERS A PROPRIETARY ITEM AND IS THE PROPERTY OF MICRO SWITCH. A DIVISION OF HONEYWELL. THIS DRAWING IS NOT TO BE COPIED OR USED WITHOUT THE APPROVAL OF MICRO SWITCH.

THIRD ANGLE PROJECTION

CHARACTERISTICS

OPERATING FORCE – – – – – – – 7–9 OZ
OVERTRAVEL – – – – – – – – – – .005 MIN

RESET CHARACTERISTICS
OVERTRAVEL – – – – – – – – – – .015 MIN
OPERATING FORCE – – – – – – – 2–10 OZ

ELECTRICAL DATA

CONTACT ARRANGEMENT
SINGLE POLE DOUBLE THROW MAINTAINED CONTACT

UL LISTED – FILE E12252
CODE L67 15A-125, 250 OR 480 VAC
1/4HP-125 VAC; 1/2HP-250 VAC
1/2A-125 VDC; 1/4A-250 VDC

SCALE FULL
DO NOT SCALE PRINT

TOLERANCES
APPLY TO DESIGN UNITS. CONVERSIONS ARE ONLY FOR REFERENCE. UNLESS NOTED, TOLERANCES ARE ±

	DIM. mm	TOL. mm/in	DIM. in	TOL. mm/in
NO PLACES	X	1/.04		
ONE PLACE	X.X	0.4/.016	X.X	0.8/.03
TWO PLACES	X.XX	0.15/.006	X.XX	0.38/.015
THREE PLACES			X.XXX	0.13/.005
ANGLES				

DESIGN UNITS SI METRIC ☐ US CUSTOMARY ☒

WEIGHT

M BZ-RX53-B7
PAGE 1 OF 1
RELEASE NO. PR-5560
REPLACES
DRAWING NUMBER
ISSUE 4
CHECK

REVISIONS

A	CO 38218	GLH 4 MAR 77
B	C077590	DLT 9 JUN 94
C	C093169	TSM 11 JUN 98

CHECK
LSD 2 FEB 76
CHECK
CHECK
R E R 29 JAN 76
DRAWN
FO-52848-A