MICRO SWITCH
FREEPORT ILLINOIS
A DIVISION OF HONEYWELL
FED. MFG. CODE 91929

SWITCH—BASIC

CATALOG LISTING
BZ-2RW863T

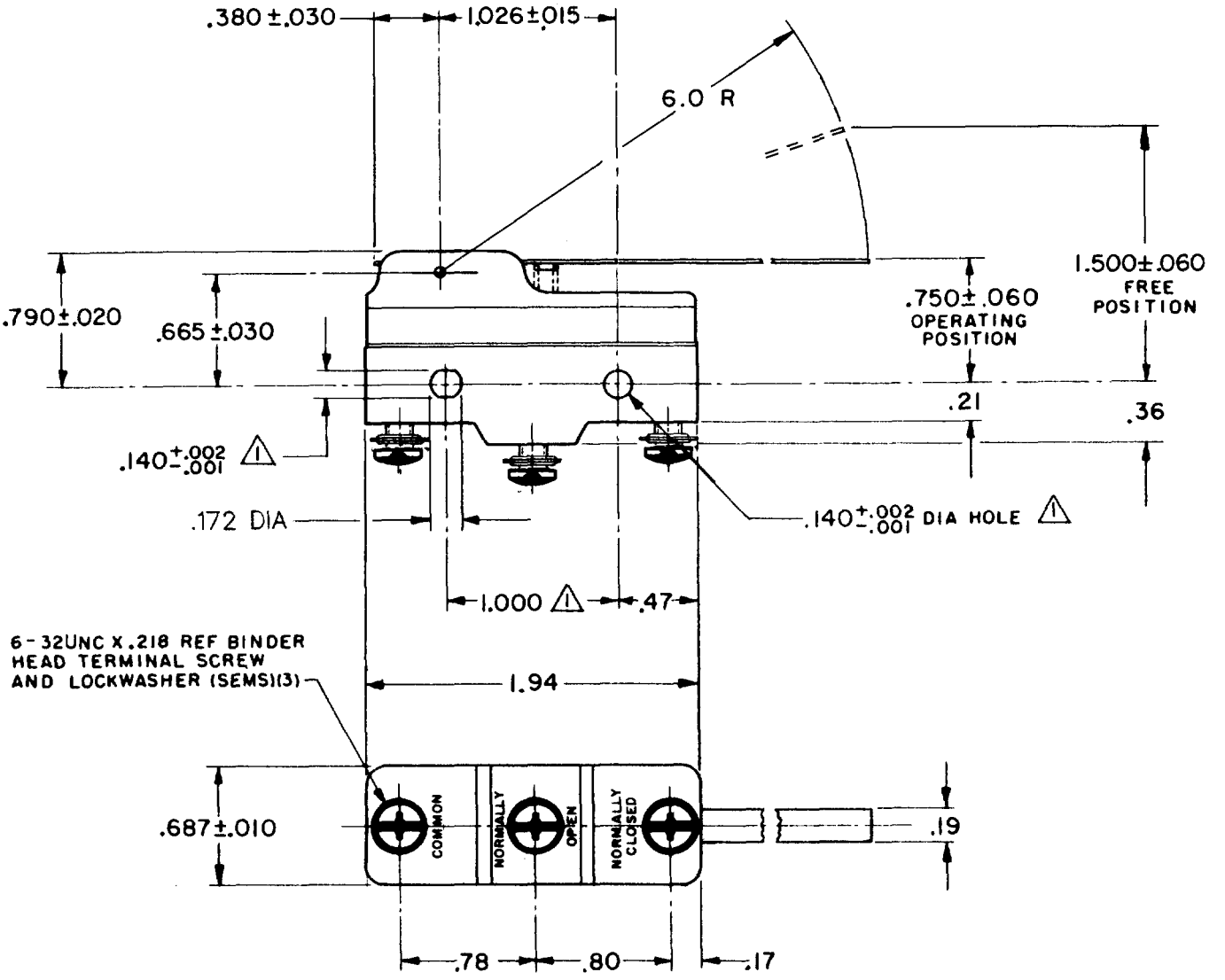

NOTE
1. MOUNTING HOLES WILL ACCEPT PINS OR SCREWS OF .139 MAX DIA ON 1.000±.002 CENTERS

THIS DRAWING COVERS A PROPRIETARY ITEM AND IS THE PROPERTY OF MICRO SWITCH, A DIVISION OF MINNEAPOLIS-HONEYWELL REGULATOR CO. THIS DRAWING IS NOT TO BE COPIED OR USED WITHOUT THE APPROVAL OF MICRO SWITCH.

CHARACTERISTICS

OPERATING FORCE — — — — 1 OZ MAX

DIFFERENTIAL TRAVEL — — — .018 — .145

OVERTRAVEL — — — — — — — .500 MIN

ELECTRICAL DATA

CONTACT ARRANGEMENT
S P D T

UNDERWRITERS' LAB. INC. LISTED RATING

-L96- 15 A-125, 250, OR 480 VAC
1/2 A-125 VDC; 1/4 A-250 VDC
1/8 HP-125 VAC, 1/4 HP-250 VAC

-L288-
-L299-
-L306-

16A 250V ∿ T85 5E4

SCALE FULL
DO NOT SCALE PRINT

UNLESS OTHERWISE SPECIFIED
DIMENSIONS ARE IN INCHES
TOLERANCES ARE:

ONE PLACE	(.0)	±.030
TWO PLACE	(.00)	±.015
THREE PLACE	(.000)	±.005
ANGLES		±

WEIGHT .073 LB

M BZ-2RW863T
PAGE 1 OF 1

DRAWING NUMBER
ISSUE 7
RELEASE NO.
REPLACES

REVISIONS

A	C016793	MBF 6 SEP 62
B	C021125	OMW 6 MAY 66
C	C061823	KAG 6 AUG 87
D	CO-69351-D	JWB 18 JUL 91
E	CO 77589	TSM 29 MAR 94
F	C093346	DLT 14 SEP 98

CHECK
CHECK
CHECK
CHECK
20 SEP 62
L SD
6 SEP 62
DRAWN MBF

FORMTEK
FO-20378