MICRO SWITCH
FREEPORT, ILLINOIS, U.S.A.
A DIVISION OF HONEYWELL
FED. MFG. CODE 91929

SWITCH-BASIC

CATALOG LISTING
BZ-2RT

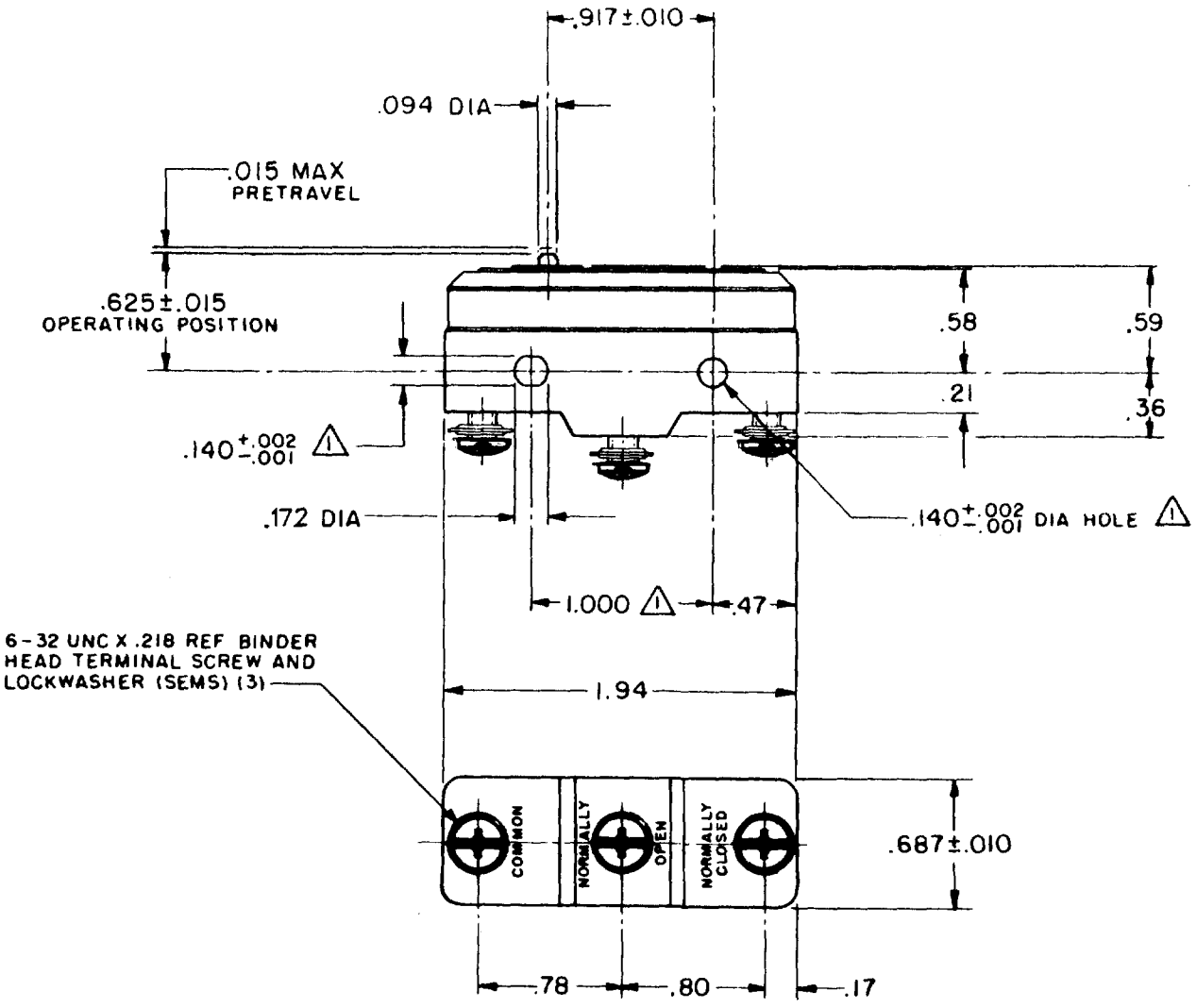

NOTE
⚠1 – MOUNTING HOLES WILL ACCEPT PINS OR SCREWS OF .139 MAX DIA ON 1.000±.002 CENTERS

THIS DRAWING COVERS A PROPRIETARY ITEM AND IS THE PROPERTY OF MICRO SWITCH, A DIVISION OF MINNEAPOLIS-HONEYWELL REGULATOR CO. THIS DRAWING IS NOT TO BE COPIED OR USED WITHOUT THE APPROVAL OF MICRO SWITCH.

CHARACTERISTICS

OPERATING FORCE ---------- 9-13 OZ
RELEASE FORCE ---------- 4 OZ MIN
DIFFERENTIAL TRAVEL ------ .0004-.0020
OVERTRAVEL ---------- .005 MIN

ELECTRICAL DATA

CONTACT ARRANGEMENT
S P D T

UNDERWRITERS' LAB. INC. LISTED RATING
-L96- 15 A-125, 250, OR 480 VAC
1/2 A-125 VDC; 1/4 A-250 VDC
1/8 HP-125 VAC, 1/4 HP-250 VAC
-L288-
-L299-
-L306-
16A 250V ~ T85 5E4

SCALE FULL
DO NOT SCALE PRINT
UNLESS OTHERWISE NOTED
DIMENSIONS ARE IN INCHES
TOLERANCES ARE:

ONE PLACE	(.0)	±.030
TWO PLACE	(.00)	±.015
THREE PLACE	(.000)	±.005
ANGLES		±1°

WEIGHT .065 LB MAX

M BZ-2RT PAGE 1 OF 1
DRAWING NUMBER
ISSUE 13
REPLACES
RELEASE NO.
CHECK

REVISIONS
A C017410 G C H 22 APRIL 63
B C026678 R E R 1 DEC 69
C CO-69351-D JWB 18 JUL 91
D CO-77589 K D R 29 MAR 94
E C093346 D L T 4 SEP 98

14 JUN 63 L.S.D. CHECK
22 APRIL 63 G C H DRAWN
FORMTEK FO-50378