MICRO SWITCH
A DIVISION OF MINNEAPOLIS-HONEYWELL REGULATOR COMPANY
FREEPORT, ILLINOIS
FED. MFR. CODE 91929

SWITCH-BASIC

CATALOG LISTING
BA-2RV

ABN7000

BA-2RV ISSUE 6

REPLACES

RELEASE NO.

DRAWING NUMBER **M** BA-2RV PAGE 1 OF 1

ISSUE 12

CHECK

REVISIONS

A	CO 15663	DAW 12 JAN 62
B	C034312	KPK 21 APR 75
C	CO 77590	SAD 10 JUN 94
D	C093346	DLT 25 AUG 98
E	CO-94212-C	DLT 20 SEP 99
F	0018387	TSG 18 JAN 06

18 JAN 06 RJ CHECK 12 JAN 62 GCH CHECK 12 JAN 62

DRAWN DAW 12 JAN 62

FORMTEK

FG-50378

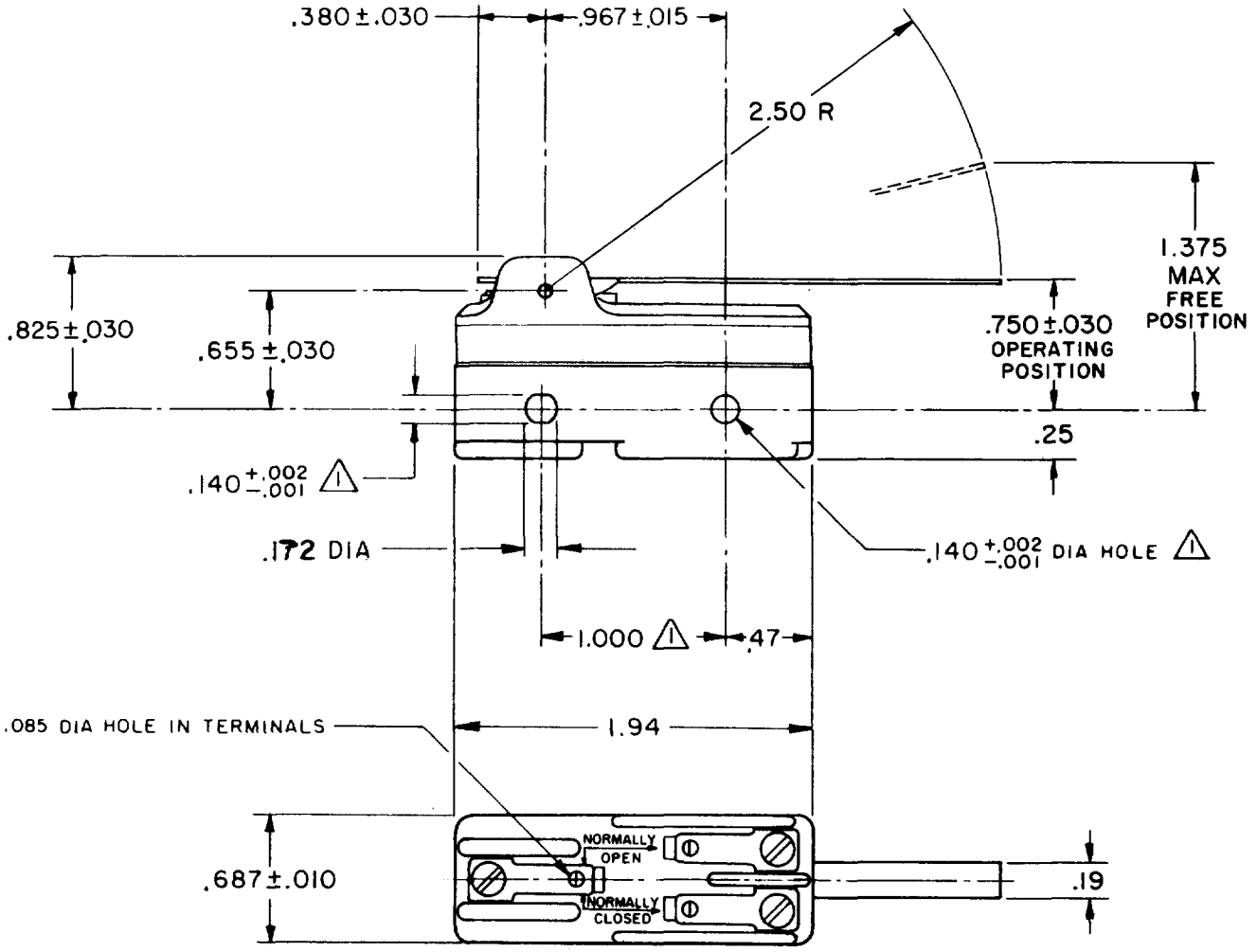

NOTE
1. MOUNTING HOLES WILL ACCEPT PINS OR SCREWS OF .139 MAX DIA ON 1.000 ±.002 CENTERS.

THIS DRAWING COVERS A PROPRIETARY ITEM AND IS THE PROPERTY OF MICRO SWITCH, A DIVISION OF MINNEAPOLIS-HONEYWELL REGULATOR CO. THIS DRAWING IS NOT TO BE COPIED OR USED WITHOUT THE APPROVAL OF MICRO SWITCH.

CHARACTERISTICS

OPERATING FORCE ----- 2 1/2 OZ MAX

RELEASE FORCE -------- 1/2 OZ MIN

PRETRAVEL ---------- .625 MAX

DIFFERENTIAL TRAVEL ------ .109 MAX

OVERTRAVEL ---------- .078 MIN

ELECTRICAL DATA

CONTACT ARRANGEMENT
S P D T

L23
20A - 125, 250 OR 480 VAC
10A - 125 VAC "L"
1HP - 125 VAC, 2HP - 250 VAC
1/2A - 125 VDC, 1/4A - 250 VDC

L288
L308
L315
20(3)A 250V ~ T85 5E4

SCALE FULL

DO NOT SCALE PRINT

UNLESS OTHERWISE SPECIFIED
DIMENSIONS ARE IN INCHES

TOLERANCES ARE:

ONE PLACE	(.0)	±.030
TWO PLACE	(.00)	±.015
THREE PLACE	(.000)	±.005
ANGLES		±

WEIGHT