ENCLOSURES & ASSEMBLY SERVICES

BOX ENCLOSURES, INC
28915 N. Herky Drive Unit, 107,
LAKE BLUFF, IL 60044
TEL: 847-932-4700 WWW.BOXENCLOSURES.COM FAX: 847-932-4701

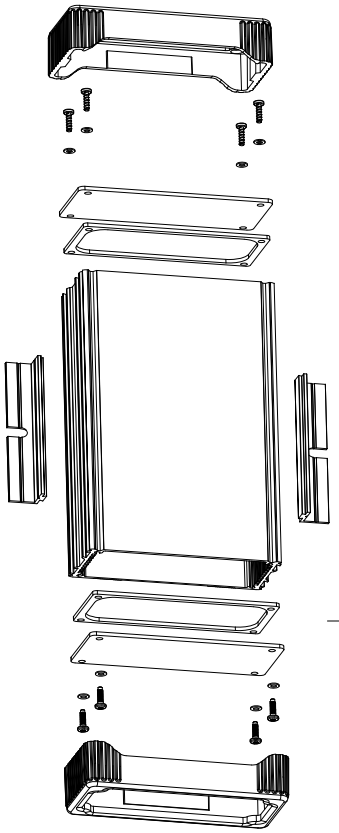

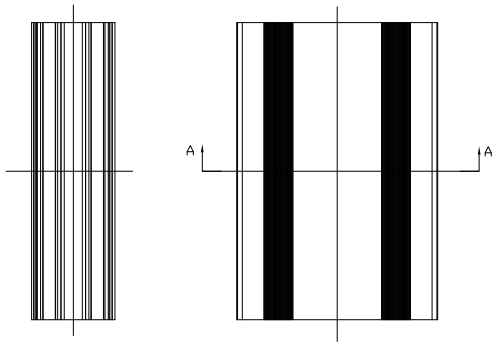

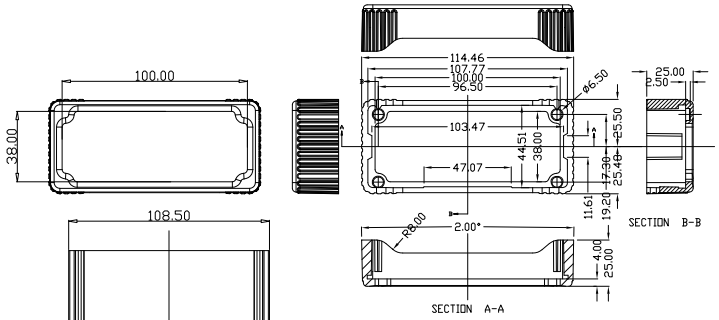

EC3_END_CAP_OPTIONAL_ACCESSORY

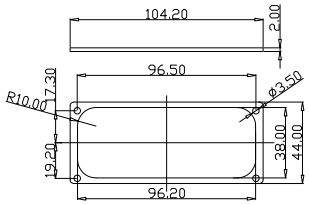

SK-3 SEALING KIT
OPTIONAL ACCESSORY

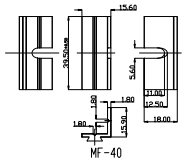

MF-40
OPTIONAL ACCESSORY

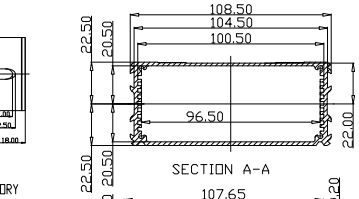

SECTION A-A

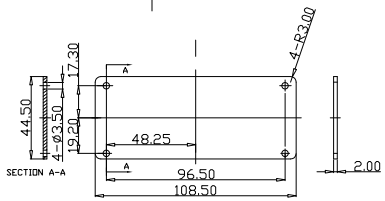

END
PLATE

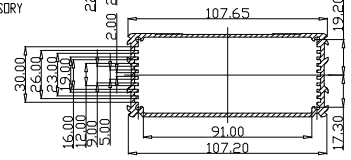

SECTION A-A

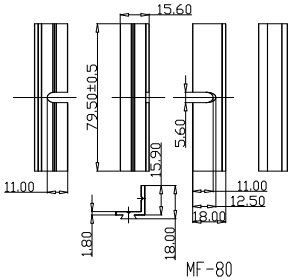

MF-80
OPTIONAL ACCESSORY

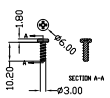

PHILIPS HEAD SCREW

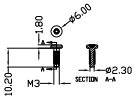

TORX HEAD SCREW

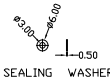

SEALING WASHERS

ENCLOSURE PROFILE

Mounting Flanges Optional Accessory (Sold individually)	
40 mm Mounting Flange Part #	Color
MF40-BK	Black
MF40-BL	Blue
MF40-GD	Gold
MF40-GR	Green
MF40-RD	Red
MF40-SI	Silver
80 mm Mounting Flange Part #	Color
MF80-BK	Black
MF80-BL	Blue
MF80-GD	Gold
MF80-GR	Green
MF80-RD	Red
MF80-SI	Silver

COLOR LEGEND	
Part #	Anodized Color
B3-160 BK	Black
B3-160 BL	Blue
B3-160 GD	Gold
B3-160 GR	Green
B3-160 RD	Red
B3-160 SI	Silver

Optional End Caps (sold in pairs)	
Part #	Color
EC-3BK	Black
EC-3BL	Blue
EC-3GN	Green
EC-3RD	Red
EC-3GY	Gray

Sealing Kit - Optional Accessory	
Part #	Description
SK-3	NEM 4/IP65 Sealing kit for ALL B-3 Series Enclosures

ENCLOSURES & ASSEMBLY SERVICES

Title B3-160 MASTER DRAWING		Dwg. No.:	Revision:
			Model:
Material: Aluminum 6063-T6(HE9)	TOLERANCE all dimension in mm unless otherwise specified. 1-5 ±0.10 5-50 ±0.30 50-200 ±0.50 ANGLE ±0.5°	Color:	Part No.:
			Drn. Date Roy 30/6/2011
Finish: Anodized BS 1615		Qty:	Chk. Date
Proj.		Sheet of	App. Date

THIS DRAWING IS THE PROPERTY OF AND MAY EMBODY PROPRIETARY INFORMATION OWNED BY Box Enclosures . IT IS PROVIDED UNDER A CONFIDENTIAL RELATIONSHIP FOR A SPECIFIC PURPOSE. THE RECIPIENT AGREES TO USE IT ONLY FOR SUCH PURPOSE AND RETURN IT TO Box Enclosure UPON REQUEST.