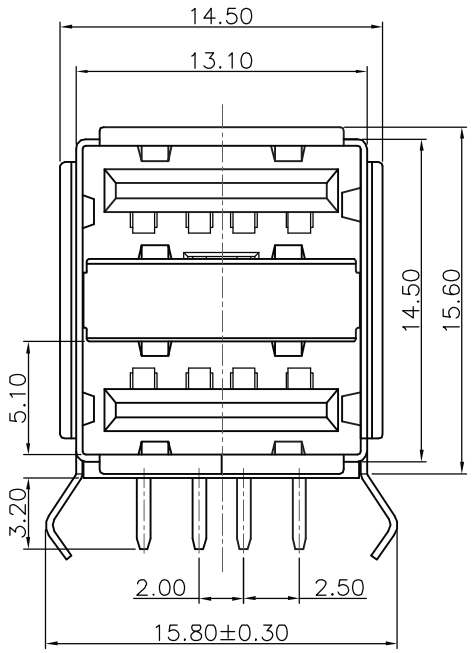

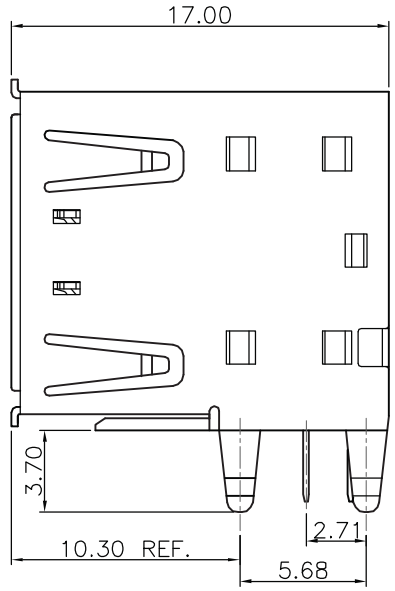

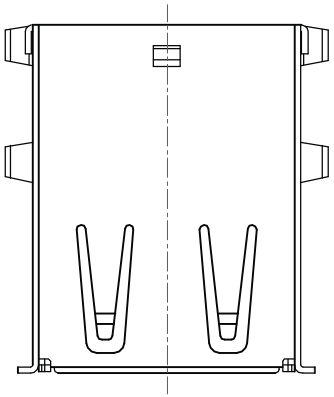

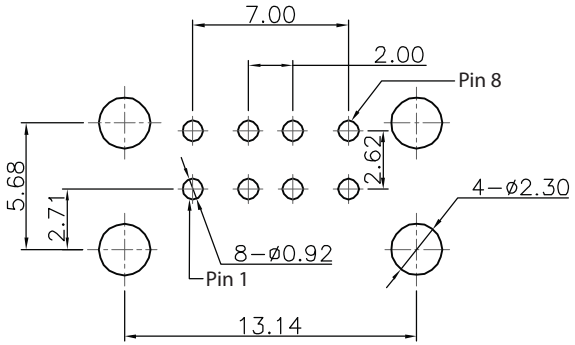

Recommended PCB Layout

Material:
- Insulator: PBT+30% G.F. UL 94V-0, Black
- Contact: Brass
- Shell: Brass

Plating:
- Contacts: Gold plated
- Shell: Nickel plated

Electrical:
- Current - Max(Amps): 1.0A
- Voltage - Max(Volts): 30V
- Withstanding voltage: 750V AC
- Contact Resistance: 30MΩ Max.
- Insulation Resistance: 1,000MΩ Min.

Environmental:
- Soldering Temperature: 223.3°C Max.

Unit: MM±0.25MM

RoHS Complaint

Scale	1:1
TOLERANCE	
X.X	±0.40
X.XX	±0.25
X.XXX	±0.15
Angle	±3°

Modification	Date	Name

		Name
Drawn	10.19.11	Chappell
Approved		

ASSMANN WSW components

Item No. **AU-Y1008-R**

Title USB 1.1 Type A Dual Stack Connector - for PCB Mounting, 5μ" Gold, Black Insulator

Drawing No. **rev00**

Replace | Sheet