Speed Controller with One-touch Fitting Stainless Series

Series AS-FG

Elbow Type/Universal Type

Stainless specifications for use in corrosive environments. Stainless steel 303 used for metal parts.

Suitable for use on CRT lines where copper ions can cause damage, for washing food processing equipment where there is exposure to water and salt water, etc., and in clean rooms where dust from discoloration and rusting of copper materials is unacceptable.

Light colors to match equipment

White resin parts are used for bodies and release buttons.

Threads with and without seal are available as standard.

Applicable tubing: Inch sizes standardized

Inch sizes are now available for all models.

Elbow type

Universal type

JIS Symbol

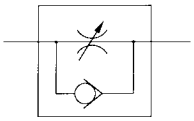

Flow Direction Symbols on Body

	Meter-out type	Meter-in type
Symbol		
JIS Symbol	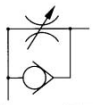	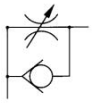

Model

Elbow type	Universal type	Port size	Applicable tubing O.D. Metric size 3.2	4	6	8	10	12	Inch size 1/8"	5/32"	3/16"	1/4"	5/16"	3/8"	1/2"	Applicable cylinder bore size (mm)
AS12□1FG-M5	AS13□1FG-M5	M5×0.8	●	●	●											6, 10, 16, 20
AS22□1FG-01	AS23□1FG-01	R 1/8	●	●	●	●	●*									20, 25, 32
AS22□1FG-02	AS23□1FG-02	R 1/4		●	●	●	●									20, 25, 32, 40
AS32□1FG-02	AS33□1FG-02	R 1/4			●	●	●	●								40, 50, 63
AS32□1FG-03	AS33□1FG-03	R 3/8			●	●	●	●								40, 50, 63
AS42□1FG-04	AS43□1FG-04	R 1/2					●	●								63, 80, 100
AS12□1FG-U10/32	AS13□1FG-U10/32	10-32 UNF							●	●	●	●				6, 10, 16, 20
AS22□1FG-N01	AS23□1FG-N01	NPT 1/8							●	●	●	●	●			20, 25, 32
AS22□1FG-N02	AS23□1FG-N02	NPT 1/4								●	●	●	●	●		20, 25, 32, 40
AS32□1FG-N02	AS33□1FG-N02	NPT 1/4										●	●	●		40, 50, 63
AS32□1FG-N03	AS33□1FG-N03	NPT 3/8										●	●	●		40, 50, 63
AS42□1FG-N04	AS43□1FG-N04	NPT 1/2												●	●	63, 80, 100

Note 1) Meter-out and meter-in types can be visually differentiated by the flow direction symbol on the resin body.
Note 2) ∗ Elbow type only

Specifications

Fluid	Air
Proof pressure	1.5 MPa
Max. operating pressure	1 MPa
Min. operating pressure	0.1 MPa
Ambient and fluid temperature	–5 to 60°C (No freezing)
Number of needle rotations	10 turns (8 turns(1))
Applicable tubing material	Nylon, Soft nylon, Polyurethane, Soft polyurethane

Note 1) In the case of AS12□1FG and AS13□1FG
Note 2) Use caution regarding the max. operating pressure when soft nylon or polyurethane, or polyurethane tubing is used.
(Refer to pages 15-6-3 to 15-6-5 for details.)

Flow Rate and Effective Area

Model		AS12□1FG AS13□1FG	AS22□1FG-□01 AS23□1FG-□01		AS22□1FG-□02 AS23□1FG-□02			AS32□1FG AS33□1FG			AS42□1FG AS43□1FG	
Tubing O.D.	Metric size	ø3.2 ø4 ø6	ø3.2 ø4	ø6 ø8 ø10	ø4	ø6	ø8 ø10	ø6	ø8	ø10 ø12	ø10	ø12
	Inch size	ø1/8" ø5/32" ø3/16" ø1/4"	ø1/8" ø5/32"	ø3/16" ø1/4" ø5/16"	ø5/32"	ø3/16"	ø1/4" ø5/16" ø3/8"	ø1/4"	ø5/16"	ø3/8"	ø3/8"	ø1/2"
Controlled flow (Free flow)	Flow rate (ℓ/min (ANR))	100	180	230	260	390	460	660	790	920	1580	1710
	Effective area (mm²)	1.5	2.7	3.5	4	6	7	10	12	14	12	26

Note) Flow rate values are measured at 0.5 MPa and 20°C.

How to Order

AS 2 3 0 1 F G – □ 01 – 06 □

Body size

1	M5 standard
2	1/8, 1/4 standard
3	3/8 standard
4	1/2 standard

Type

2	Elbow
3	Universal

Control type

0	Meter-out
1	Meter-in

With One-touch fitting

Stainless steel specifications (SUS303)

Thread type

Nil	Metric thread (M5)
	Unified thread (10-32 UNF)
	R
N	NPT

Port size

M5	M5 x 0.8
U10/32	10-32 UNF
01	1/8
02	1/4
03	3/8
04	1/2

Applicable tubing O.D.

Metric size

23	ø3.2*
04	ø4
06	ø6
08	ø8
10	ø10
12	ø12

* Use ø1/8" tube.

Inch size

01	ø1/8"
03	ø5/32"
05	ø3/16"
07	ø1/4"
09	ø5/16"
11	ø3/8"
13	ø1/2"

Option

Nil	None
S	With seal*

* M5 and U10/32 are not available with seal.

Needle Valve/Flow Characteristics

AS12□1FG
AS13□1FG

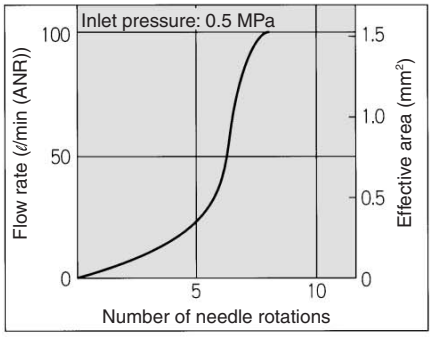

AS22□1FG-□01
AS23□1FG-□01

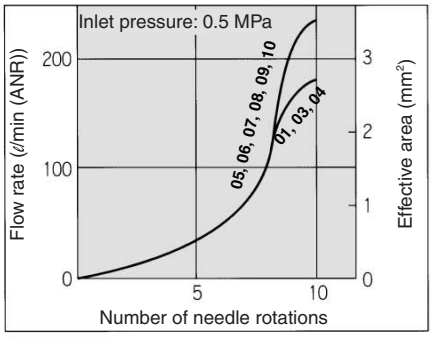

AS22□1FG-□02
AS23□1FG-□02

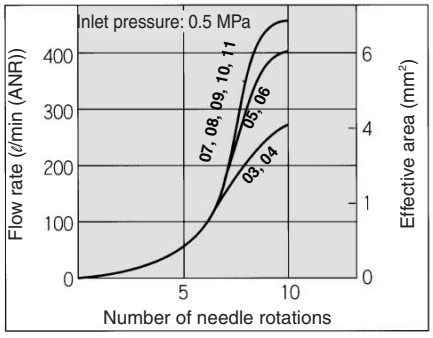

AS32□1FG
AS33□1FG

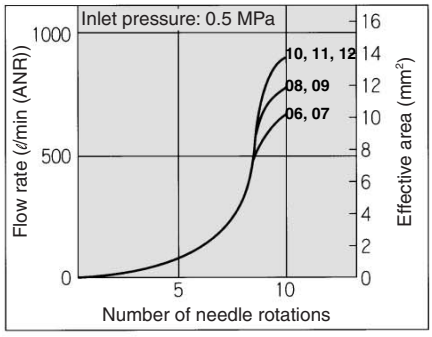

AS42□1FG
AS43□1FG

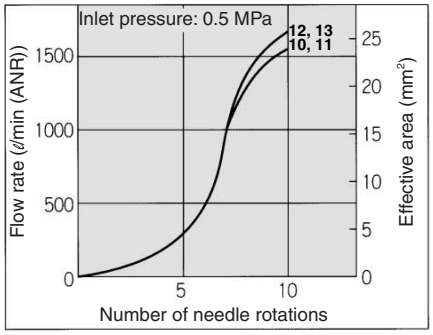

Construction: Elbow Type

Meter-out type
M5 type
U10/32 type

AS3201FG-02

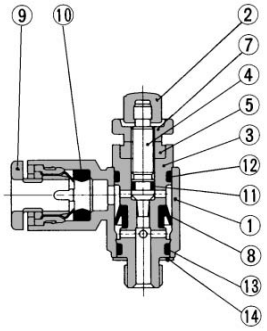

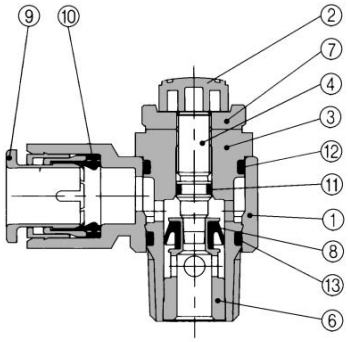

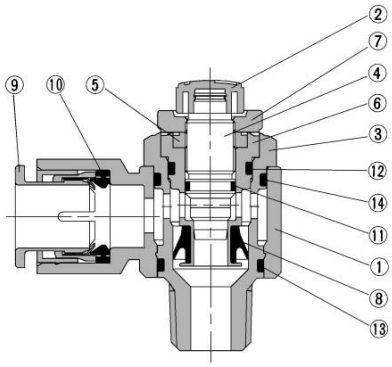

Meter-in type
M5 type
U10/32 type

AS3211FG-02

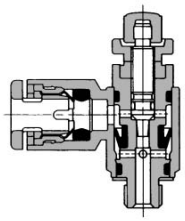

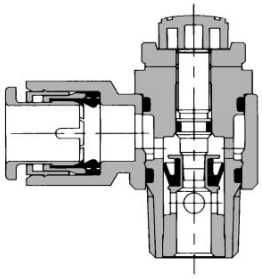

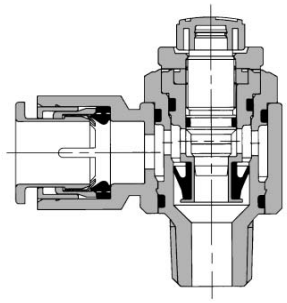

Component Parts

No.	Description	Material	Note
①	Body A	PBT	
②	Handle	PBT	
③	Body B	Stainless steel 303	
④	Needle	Stainless steel 303	
⑤	Needle guide	Stainless steel 303	
⑥	Seat ring	Stainless steel 303	
⑦	Lock nut	Stainless steel 303	
⑧	U seal	HNBR	
⑨	Cassette	POM, Stainless steel	
⑩	Seal	NBR	
⑪	O-ring	NBR	
⑫	O-ring	NBR	
⑬	O-ring	NBR	
⑭	O-ring	NBR	
⑮	Gasket	NBR/stainless steel 304	M5 type only

⚠ Caution

Be sure to read before handling. Refer to pages 15-18-3 to 15-18-4 for Safety Instructions and Common Precautions on the products mentioned in this catalog, and refer to pages 15-8-6 to 15-8-8 for Precautions on every series.

Construction: Universal Type

Meter-out type
M5 type
U10/32 type

AS3301FG-02

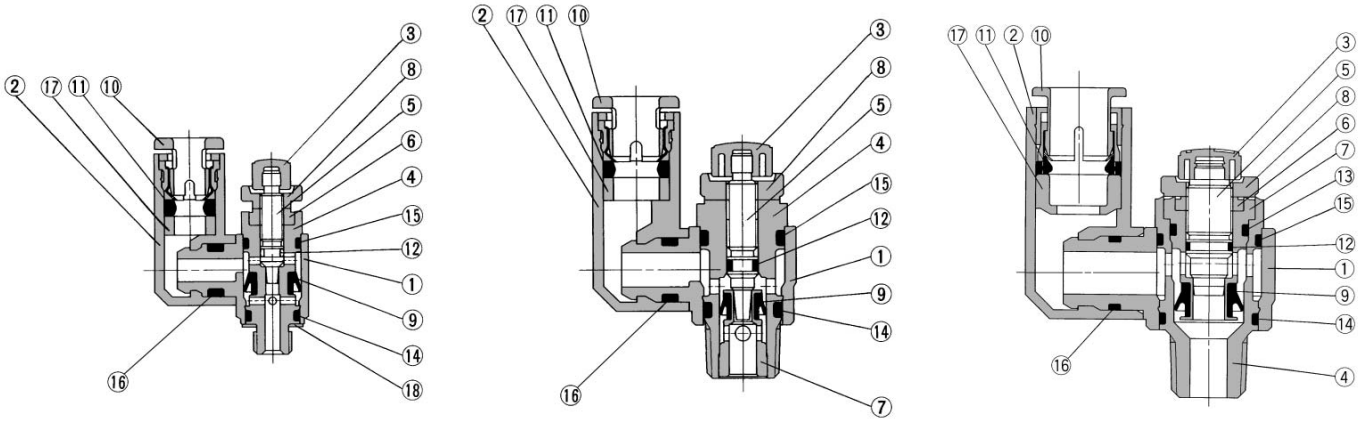

Meter-in type
M5 type
U10/32 type

AS3311FG-02

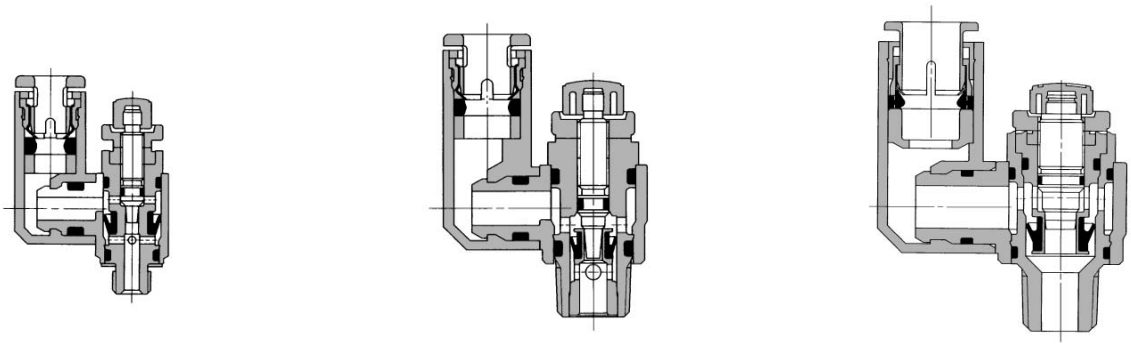

Component Parts

No.	Description	Material	Note
①	Body A	PBT	
②	Elbow body	PBT	
③	Handle	PBT	
④	Body B	Stainless steel 303	
⑤	Needle	Stainless steel 303	
⑥	Needle guide	Stainless steel 303	
⑦	Seat ring	Stainless steel 303	
⑧	Lock nut	Stainless steel 303	
⑨	U seal	HNBR	
⑩	Cassette	POM, Stainless steel	
⑪	Seal	NBR	
⑫	O-ring	NBR	
⑬	O-ring	NBR	
⑭	O-ring	NBR	
⑮	O-ring	NBR	
⑯	O-ring	NBR	
⑰	Spacer	PBT Note)	
⑱	Gasket	NBR, Stainless steel	

Note) ø3/16", ø3/8" and ø1/2" are made of stainless steel 303.
AS13□1FG(ø3.2, ø4, ø6, ø1/8", ø5/32", ø1/4"),
AS23□1FG-□01(ø3.2, ø4, ø6, ø1/8", ø5/32") are made of POM.

Dimensions: Elbow Type

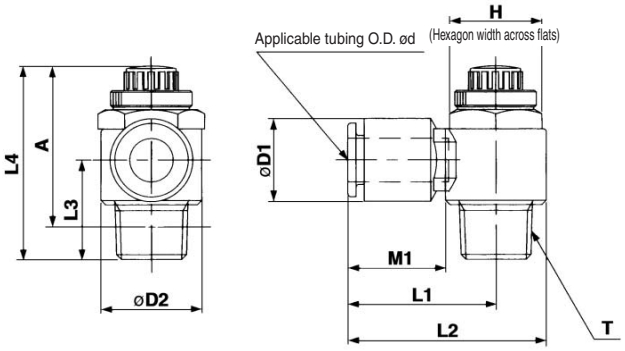

M5 type
U10/32 type

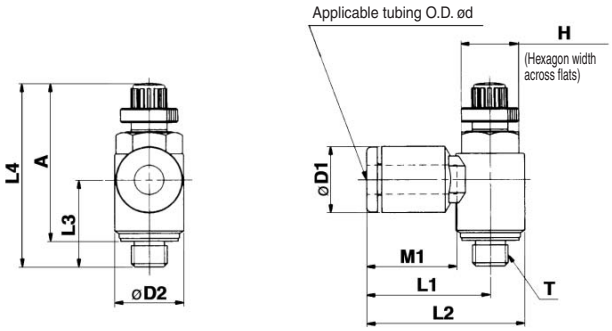

Metric Size

Model	d	T	H	D1	D2	L1	L2	L3	L4 Max.	L4 Min.	A* Max.	A* Min.	M1	Weight (g)
AS12□1FG-M5-23	3.2	M5 × 0.8	8	8.4	9.6	17.3	22.1	12.3	28.6	25.8	25	22.2	12.7	7
AS22□1FG-01-23	3.2	R 1/8	12	9.3	14.2	20.4	27.5	14.3	36.1	31.1	32.1	27.1	12.7	16
AS12□1FG-M5-04	4	M5 × 0.8	8	9.3	9.6	17.3	22.1	12.3	28.6	25.8	25	22.2	12.7	7
AS12□1FG-M5-06	6			11.6		18.1	22.9	11.7					13.5	
AS22□1FG-01-04	4	R 1/8	12	9.3	14.2	20.4	27.5	14.3	36.1	31.1	32.1	27.1	12.7	17
AS22□1FG-01-06	6			11.6		20.4	27.5						13.5	
AS22□1FG-01-08	8			15.2		25.3	32.4						18.5	19
AS22□1FG-01-10	10			18.5		33.1	40.2	15					21	21
AS22□1FG-02-04	4	R 1/4	17	10.4	18.5	25.2	34.4	18.2	40.4	35.4	34.4	29.4	16	32
AS22□1FG-02-06	6			12.8		25.2	34.4						17	
AS22□1FG-02-08	8			15.2		27.2	36.4						18.5	34
AS22□1FG-02-10	10			18.5		33.9	43.2	20					21	36
AS32□1FG-02-06	6	R 1/4	19	12.8	23	27.8	39.3	21.8	48.8	43.8	42.8	37.8	17	60
AS32□1FG-02-08	8			15.2		29.5	41						18.5	63
AS32□1FG-02-10	10			18.5		31.8	43.3						21	67
AS32□1FG-02-12	12			20.9		32.8	44.3						22	69
AS32□1FG-03-06	6	R 3/8	19	12.8	23	27.8	39.3	20.9	46.5	41.5	40.2	35.2	17	55
AS32□1FG-03-08	8			15.2		29.5	41						18.5	57
AS32□1FG-03-10	10			18.5		31.8	43.3						21	59
AS32□1FG-03-12	12			20.9		32.8	44.3						22	61
AS42□1FG-04-10	10	R 1/2	24	18.5	28.6	33.6	47.9	25.4	57.6	50.1	49.6	42.1	21	100
AS42□1FG-04-12	12			20.9		34.6	48.9						22	101

∗ Reference dimensions of M5 x 0.8, R threads after installation.

Inch Size

Model	d	T	H	D1	D2	L1	L2	L3	L4 Max.	L4 Min.	A* Max.	A* Min.	M1	Weight (g)
AS12□1FG-U10/32-01	1/8"	10-32 UNF	8	8.4	9.6	17.3	22.1	12.3	28.6	25.8	25	22.2	12.7	7
AS12□1FG-U10/32-03	5/32"			9.3										
AS12□1FG-U10/32-05	3/16"			11.4		21.3	26.1	11.7					16.5	
AS12□1FG-U10/32-07	1/4"			12		18.3	23.1						13.5	
AS22□1FG-N01-01	1/8"	NPT 1/8	12.7	9.3	14.2	20.4	27.5	14.3	36.1	31.1	32.1	27.1	12.7	16
AS22□1FG-N01-03	5/32"													17
AS22□1FG-N01-05	3/16"			11.4		23.1	30.2						16.5	
AS22□1FG-N01-07	1/4"			13.2		23.9	31						18.5	19
AS22□1FG-N01-09	5/16"			15.2		25.3	32.4	15					21	21
AS22□1FG-N02-03	5/32"	NPT 1/4	17.5	10.4	18.5	25.2	34.4	18.2	40.4	35.4	34.4	29.4	16	32
AS22□1FG-N02-05	3/16"			11.4		24.9	34.2						17	
AS22□1FG-N02-07	1/4"			13.2		25.2	34.5						18.5	34
AS22□1FG-N02-09	5/16"			15.2		27.2	36.4	20					21	36
AS22□1FG-N02-11	3/8"			17.9		33.9	43.2							
AS32□1FG-N02-07	1/4"	NPT 1/4	19	13.2	23	27.8	39.3	21.8	48.8	43.8	42.8	37.8	17	60
AS32□1FG-N02-09	5/16"			15.2		29.5	41						18.5	63
AS32□1FG-N02-11	3/8"			17.9		31.8	43.3						21	67
AS32□1FG-N03-07	1/4"	NPT 3/8	19	13.2	23	27.8	39.3	20.9	46.5	41.5	40.2	35.2	17	55
AS32□1FG-N03-09	5/16"			15.2		29.5	41						18.5	57
AS32□1FG-N03-11	3/8"			17.9		31.8	43.3						21	59
AS42□1FG-N04-11	3/8"	NPT 1/2	23.8	17.9	28.6	33.6	47.9	25.4	57.6	50.1	49.6	42.1	21	100
AS42□1FG-N04-13	1/2"			21.7		35.2	49.5						22	101

∗ Reference dimensions of 10-32UNF and NPT threads after installation.

Dimensions: Universal Type

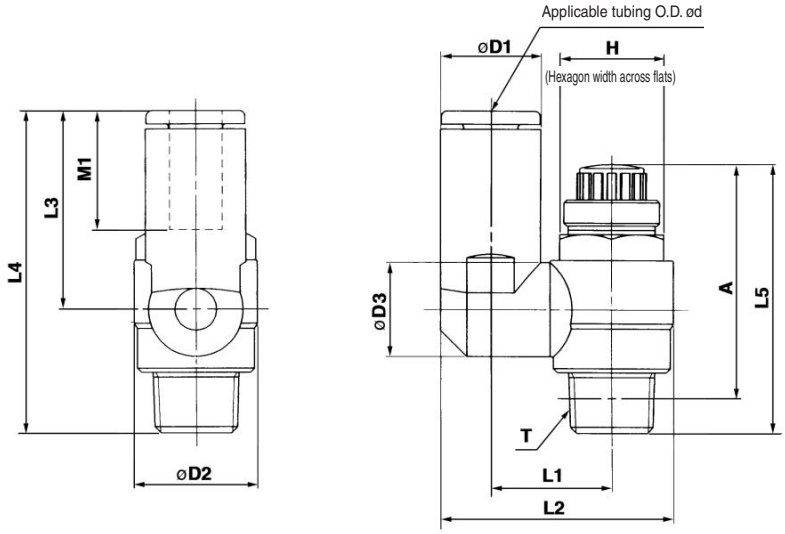

M5 type
U10/32 type

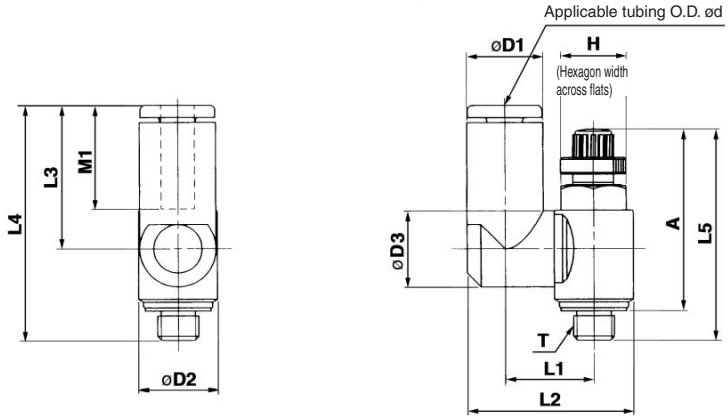

Metric Size

Model	d	T	H	D1	D2	D3	L1	L2	L3	L4	L5 Max.	L5 Min.	A* Max.	A* Min.	M1	Weight (g)
AS13□1FG-M5-23	3.2	M5 × 0.8	8	8.4	9.6	9.3	10.8	19.8	17.5	28.7	28.6	25.8	25	22.2	12.7	7
AS13□1FG-M5-04	4			9.3				20.3								
AS13□1FG-M5-06	6			11.6				21.4	20.6	31.8					13.5	
AS23□1FG-01-23	3.2	R 1/8	12	8.4	14.2	9.3	13.1	24.4	17.5	31.8	36.1	31.1	32.1	27.1	12.7	17
AS23□1FG-01-04	4			9.3				24.9								18
AS23□1FG-01-06	6			11.6		10.9	14	26.9	22.9	37.2					13.5	
AS23□1FG-01-08	8			15.2		12.9	16.2	30.9	28.2	41.7					18.5	21
AS23□1FG-02-04	4	R 1/4	17	10.4	18.5	10.9	16.2	30.6	21.9	40.1	40.4	35.4	34.4	29.4	16	32
AS23□1FG-02-06	6			12.8		12.9	18.4	34	25.2	42.6					17	33
AS23□1FG-02-08	8			15.2			18.3	35.2	28.2	45.6					18.5	36
AS23□1FG-02-10	10			18.5			20.2	38.7	31	48.4					21	40
AS33□1FG-02-06	6	R 1/4	19	12.8	23	12.9	20.6	38.5	25.2	47	48.8	43.8	42.8	37.8	17	60
AS33□1FG-02-08	8			15.2				39.7	28.2	50					18.5	63
AS33□1FG-02-10	10			18.5		16.2	23	43.7	32.6	54.4					21	67
AS33□1FG-02-12	12			20.9				44.9	34.4	56.2					22	69
AS33□1FG-03-06	6	R 3/8	19	12.8	23	12.9	20.6	38.5	25.2	46.1	46.5	41.5	40	35	17	56
AS33□1FG-03-08	8			15.2				39.7	28.2	49.1					18.5	59
AS33□1FG-03-10	10			18.5		16.2	23	43.7	32.6	53.5					21	63
AS33□1FG-03-12	12			20.9				44.9	34.4	55.3					22	65
AS43□1FG-04-10	10	R 1/2	24	18.5	28.6	16.2	25.8	49.4	32.6	58	57.6	50.1	49.6	42.1	21	104
AS43□1FG-04-12	12			20.9		19.4	26.8	52	36.3	61.7					22	105

∗ Reference dimensions of M5 x 0.8, R threads after installation.

Inch Size

Model	d	T	H	D1	D2	D3	L1	L2	L3	L4	L5 Max.	L5 Min.	A* Max.	A* Min.	M1	Weight (g)
AS13□1FG-U10/32-01	1/8"	10-32 UNF	8	8.4	9.6	9.3	10.8	19.8	17.5	28.7	28.6	25.8	25	22.2	12.7	7
AS13□1FG-U10/32-03	5/32"			9.3				20.3								
AS13□1FG-U10/32-05	3/16"			11.4				21.3	23.3	34.5					16.5	8
AS13□1FG-U10/32-07	1/4"			12				21.6	20.7	31.9					13.7	
AS23□1FG-N01-01	1/8"	NPT 1/8	12.7	8.4	14	9.3	13.1	24.4	17.5	31.8	36.1	31.1	32.1	27.1	12.7	17
AS23□1FG-N01-03	5/32"			9.3				24.9								18
AS23□1FG-N01-05	3/16"			11.4		10.9	14	26.8	23.9						16.5	
AS23□1FG-N01-07	1/4"			13.2		12.9	16.2	29.9	25.6	37.2					18.5	19
AS23□1FG-N01-09	5/16"			15.2				30.9	28.2	41.7					21	21
AS23□1FG-N02-03	5/32"	NPT 1/4	17.5	10.4	19	10.9	16.2	30.6	21.9	40.1	40.4	35	34.4	29.4	16	32
AS23□1FG-N02-05	3/16"			11.4				31.1	23.9	42.6					17	33
AS23□1FG-N02-07	1/4"			13.2		12.9	18.3	34.2	25.6	45.6					18.5	36
AS23□1FG-N02-09	5/16"			15.2				35.2	28.2	48.4					21	39
AS23□1FG-N02-11	3/8"			17.9			20.2	38.7	31	47						40
AS33□1FG-N02-07	1/4"	NPT 1/4	19	13.2	23	12.9	20.6	38.7	25.6	50	48.8	43.8	42.8	37.8	17	60
AS33□1FG-N02-09	5/16"			15.2				39.7	28.2	54.4					18.5	63
AS33□1FG-N02-11	3/8"			17.9		16.2	23	43.7	32.6	56.2					21	69
AS33□1FG-N03-07	1/4"	NPT 3/8	19	13.2	23	12.9	20.6	38.7	25.6	46.1	46.5	41.5	40.2	35.2	17	56
AS33□1FG-N03-09	5/16"			15.2				39.7	28.2	49.1					18.5	59
AS33□1FG-N03-11	3/8"			17.9		16.2	23	43.7	32.6	53.5					21	65
AS43□1FG-N04-11	3/8"	NPT 1/2	23.8	17.9	29	16.2	25.8	49.4	32.6	55.3	57.6	50.1	49.6	42.1	21	104
AS43□1FG-N04-13	1/2"			21.7		19.4	26.8	52	36.3	58					22	106

∗ Reference dimensions of 10-32UNF and NPT threads after installation.

Speed Controller with One-touch Fittings Stainless Series

Series AS-FG

In-line Type

Model

Model	Applicable tubing O.D.													Applicable cylinder bore size (mm)
	Metric size						Inch size							
	3.2	4	6	8	10	12	1/8"	5/32"	3/16"	1/4"	5/16"	3/8"	1/2"	
AS1001FG	●	●	●				●	●	●	●				6, 10, 16, 20
AS2001FG		●	●					●	●	●				20, 25, 32
AS2051FG			●	●					●	●	●			20, 25, 32, 40
AS3001FG			●	●	●	●				●	●	●		40, 50, 63
AS4001FG					●	●						●	●	63, 80, 100

Specifications

Fluid	Air
Proof pressure	1.5 MPa
Max. operating pressure	1 MPa
Min. operating pressure	0.1 MPa
Ambient and fluid temperature	–5 to 60°C (No freezing)
Number of needle rotations	10 turns (8 turns(1))
Applicable tubing material (2)	Nylon, Soft nylon, Polyurethane, Soft polyurethane

Note 1) In the case of AS1001FG type
Note 2) Use caution regarding the max. operating pressure when soft nylon or polyurethane, or soft polyurethane tubing is used.
(Refer to pages 15-6-3 to 15-6-5 for details.)

Flow Rate and Effective Area

Model		AS1001FG	AS2001FG		AS2051FG		AS3001FG			AS4001FG	
Tubing O.D.	Metric size	ø3.2 ø4 ø6	ø4	ø6	ø6	ø8	ø6	ø8	ø10 ø12	ø10	ø12
	Inch size	ø1/8" ø5/32" ø3/16"	ø5/32"	ø3/16" ø1/4"	ø3/16"	ø1/4" ø5/16"	ø1/4"	ø5/16"	ø3/8"	ø3/8"	ø1/2"
Controlled flow (Free flow)	Flow rate (ℓ/min (ANR))	100	130	230	290	460	420	660	920	1050	1390
	Effective area (mm^2)	1.5	2	3.5	4.5	7	6.5	10	14	16	21

Note) Flow rate values are measured at 0.5 MPa and 20°C.

Flow Direction Symbols on Body

Symbol		JIS Symbol	

How to Order

AS 200 1 F G – 06

Body size

100	M5 standard
200	1/8 standard
205	1/4 standard
300	3/8 standard
400	1/2 standard

With One-touch fittings

Stainless steel specifications (SUS303)

Applicable tubing O.D.

Metric size

23	ø3.2 *
04	ø4
06	ø6
08	ø8
10	ø10
12	ø12

* Use ø1/8" tube.

Inch size

01	ø1/8"
03	ø5/32"
05	ø3/16"
07	ø1/4"
09	ø5/16"
11	ø3/8"
13	ø1/2"

Needle Valve/Flow Characteristics

AS1001FG

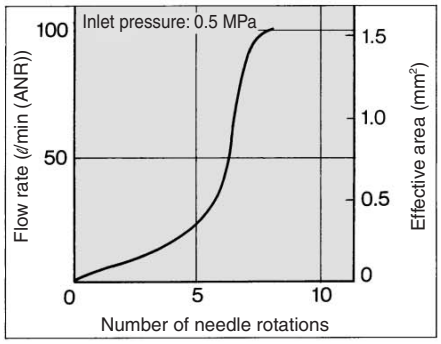

AS2001FG

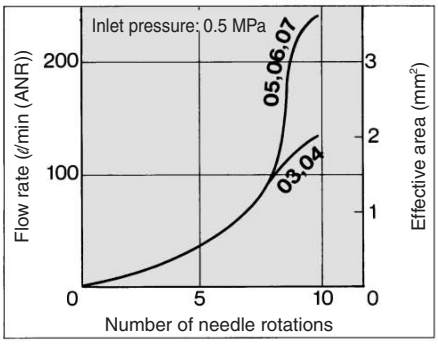

AS2051FG

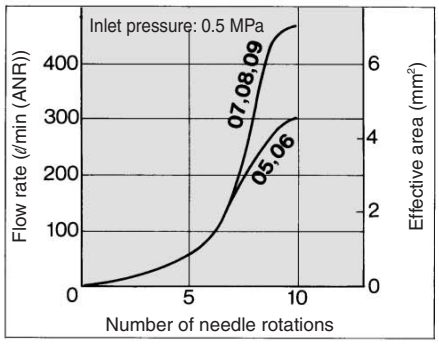

AS3001FG

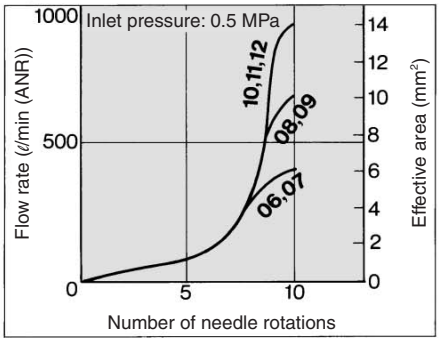

AS4001FG

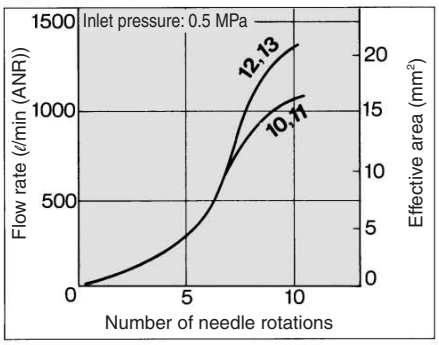

Construction

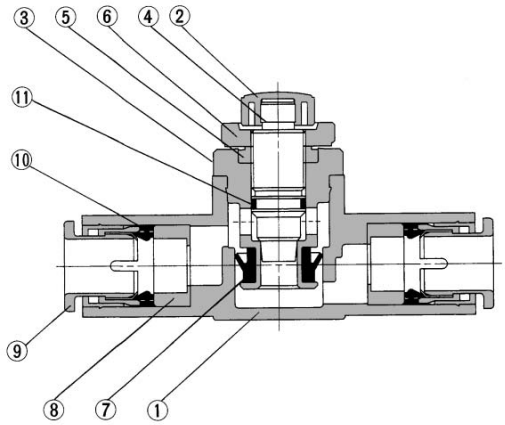

Component Parts

No.	Description	Material	Note
①	Body A	PBT	
②	Handle	PBT	
③	Body B	Stainless steel 303	
④	Needle	Stainless steel 303	
⑤	Needle guide	Stainless steel 303	
⑥	Lock nut	Stainless steel 303	
⑦	U seal	HNBR	
⑧	Spacer	PBT Note)	
⑨	Cassette	POM, Stainless steel	
⑩	Seal	NBR	
⑪	O-ring	NBR	

Note) ø3/16", ø3/8" and ø1/2" are made of stainless steel 303.
AS1001FG(ø3.2, ø4, ø6, ø1/8", ø5/32", ø1/4"),
AS2001FG(ø4, ø6, ø5/32") are POM.

Dimensions

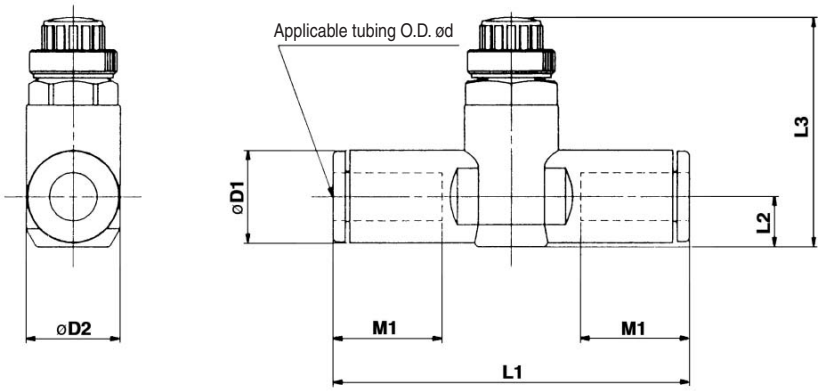

Metric Size

Model	d	D1	D2	L1	L2	L3 Max.	L3 Min.	M1	Weight (g)
AS1001FG-23	3.2	8.4	10	38	4.5	23.5	20.7	12.7	6
AS1001FG-04	4	9.3		39.2	5.2	24.2	21.4		7
AS1001FG-06	6	11.6		40.7	6.2	25.2	22.4	13.5	8
AS2001FG-04	4	9.3	11.8	40.7	5.2	32.6	27.6	12.7	12
AS2001FG-06	6	11.6		44.8	6.3	33.7	28.7	13.5	13
AS2051FG-06	6	12.8	14.8	53.2	6.7	35.2	30.2	17	26
AS2051FG-08	8	15.2		59.8	8.1	32.6	27.6	18	31
AS3001FG-06	6	12.8	19.8	59	7.4	38.3	33.3	17	18
AS3001FG-08	8	15.2		64.4	8.2	39.1	34.1	18	21
AS3001FG-10	10	18.5		71.6	9.8	40.6	35.6	21	32
AS3001FG-12	12	20.9		76	11	41.8	36.8	22	33
AS4001FG-10	10	18.5	26.5	82	11.3	51.1	43.6	21	36
AS4001FG-12	12	20.9				52.1	44.6	22	40

Inch Size

Model	d	D1	D2	L1	L2	L3 Max.	L3 Min.	M1	Weight (g)
AS1001FG-01	1/8"	8.4	10	38	4.5	23.5	20.7	12.7	6
AS1001FG-03	5/32"	9.3		39.2	5.2	24.2	21.4		7
AS1001FG-05	3/16"	11.4		48.7	6.2	25.2	22.4	16.5	8
AS1001FG-07	1/4"	12		40.7				13.7	9
AS2001FG-03	5/32"	9.3	11.8	40.7	5.2	32.6	27.6	12.7	12
AS2001FG-05	3/16"	11.4		50	6.2	33.6	28.6	16.5	18
AS2001FG-07	1/4"	13.2		52.2	7.1	34.5	29.5	17	21
AS2051FG-05	3/16"	11.4	14.8	52.2	6.2	34.6	29.6	16.5	24
AS2051FG-07	1/4"	13.2		54.4	7.1	35.5	30.5	17	26
AS2051FG-09	5/16"	15.2		59.8	8.1	32.6	27.6	18	31
AS3001FG-07	1/4"	13.2	19.8	59	7.4	38.3	33.3	17	42
AS3001FG-09	5/16"	15.2		64.4	8.2	39.1	34.1	18	46
AS3001FG-11	3/8"	17.9		70.8	9.5	40.3	35.3	21	53
AS4001FG-11	3/8"	17.9	26.5	76.9	10.3	51	43.5	21	97
AS4001FG-13	1/2"	21.7		83.1	11.6	52.4	44.9	22	106

Flow Control Equipment
Precautions

Be sure to read before handling. Refer to pages 15-18-3 to 15-18-4 for Safety Instructions and Common Precautions on the products mentioned in this catalog, and refer to main text for more detailed precautions on every series.

⚠ Precautions

Selection

⚠ Warning

1. **Products mentioned in this catalog are not designed for the use as stop valve with zero air leakage.**
   A certain amount of leakage is allowed in the product's specifications.

Mounting

⚠ Warning

1. **Check that the lock nut is tightened.**
   A loose lock nut may cause actuator speed changes.
2. **Confirm the degree of rotation of the needle valve.**
   Products mentioned in this catalog are retainer type so that the needle is not removed completely. Over rotation will cause damage.
3. **Do not use tools such as pliers to rotate the handle.**
   It can cause idle rotation of the handle or damage.
4. **Confirm air flow direction.**
   Mounting backwards is dangerous, because the speed adjustment needle will not work and the actuator may lurch suddenly.
5. **Adjust needle by opening the needle slowly after having closed it completely.**
   Loose needle valves may cause unexpected sudden actuator extension. When needle valve is turned clockwise, it is closed and cylinder speed decreases. When needle valve is turned counter clockwise, it is open and cylinder speed increases.
6. **Do not apply excessive force or shock to the body or fittings with an impact tool.**
   It can cause damage or air leakage.

Series AS-F/FE/FG/FM

Selection

⚠ Warning

1. **Confirm that PTFE can be used in application.**
   PTFE powder (Polytetrafluoroethylene resin) is included in the seal material. Confirm if the use of it may cause any adverse effect in the system.

Mounting

⚠ Warning

1. **To install/remove the Flow Control Equipment, tighten/loosen at wrench flat B as close to the thread as possible using the appropriate wrench.**
   Do not apply torque at other points as the product may be damaged. Rotate Body A manually for positioning after installation.
2. **Do not use universal type fittings for applications involving continuous rotation.**
   The fitting section may be damaged.

Tightening Torque

⚠ Caution

1. **The tightening torque for pipe fittings is as shown in the table. As a rule, they should be tightened 2 to 3 turns with a tool after first tightening by hand.**
   Be careful not to cause damage by over-tightening.

Male thread	Suitable screw torque (N·m)	Hexagon width across flats (mm)	Adjustable spanner nominal (mm)
M3	1/4	4.5	—
M5 **10/32-UNF**	1/6 turn after hand tightening	8	100
1/8	7 to 9	14	150
1/4	12 to 14	17	200
3/8	22 to 24	21	200
1/2	28 to 30	24	200

Lock Nut Tightening Torque

⚠ Caution

1. **Suitable screw torque for a hexagon lock nut is shown in the table below. For standard installation, turn 15 to 30° using tool, after fastening by hand. Pay attention not to over torque the product.**

Body size	Suitable screw torque (N·m)
M3	0.07
M5	0.3
1/8	1
1/4	1.5
3/8	4
1/2	10

⚠ Precautions

Handling of One-touch Fittings

⚠ Caution

1. Refer to page 15-1-11 for One-touch Fitting.

Series ASD

Operation

⚠ Caution

1. Single acting cylinder

When controlling a single acting cylinder, the cylinder's return speed will differ depending on the operating conditions. Operate after confirming the maximum return speeds shown in the table below.

Speed Controller	Cylinder	Solenoid valve	Tubing	Silencer	Maximum return speed (mm/s) 100 200 300
ASD230F	CJ2	VJ500	TU0604 1 m	AN110-01	ø6, ø10, ø16 — Cylinder size
ASD330F	CM2	VZ500	TU0604 1 m	AN110-01	ø20, ø25, ø32 — Cylinder size

<Operating conditions>
- Cylinder extension speed: 100 mm/s
- Meter-out needle fully open

∗ Values at 0.5 MPa and 20°C.

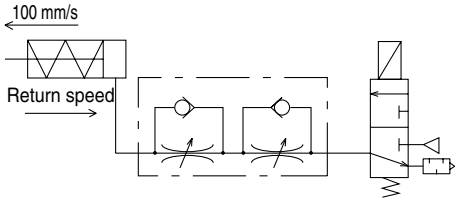

(Reference) Recommended circuit for high return speed

When low extension speed and high return speed are desired, the following circuit using 3-port is recommended.

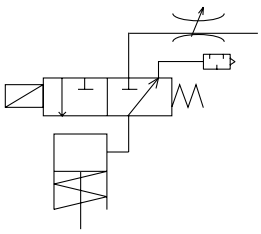

Note) Use Series AS-F with -X214 for the throttle valve.

Series ASN2

Selection

⚠ Warning

1. Inappropriate Circuits

(a) "Perfect Valve" (VF66□□, VS7-6-FPG, VS7-8-FPG)

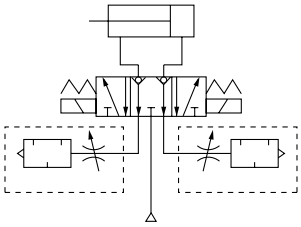

Residual pressure behind the exhaust needle may cause check valve malfunction in the "Perfect Valve".

(b) Pilot check valve between Actuator and Valve

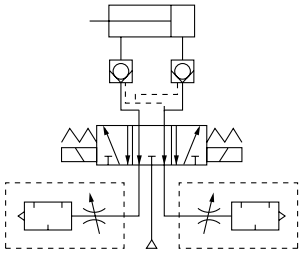

Residual pressure behind the exhaust needle may cause check valve to malfunction.

Mounting

⚠ Caution

1. If installing flow controls to valve ports, interference may occur with the fittings. Please consult the catalog before installing.

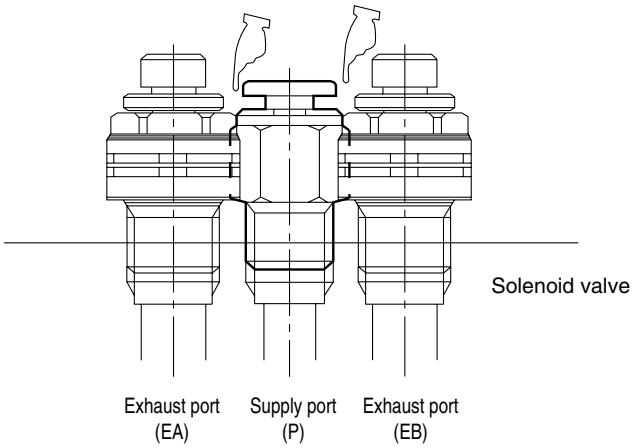

Fig. Example of the interference with fittings

Series AK

⚠ Caution

1. Vibrations may generate due to operating conditions, etc., even if the specifications are in the range mentioned in the catalog. Please consult with SMC.

2. Cracking pressure is a pressure at which the valve starts opening and not a pressure at which the valve is fully open.

⚠Precautions

Series ASS

Selection

⚠Warning

1. **Use meter-out controlling type after confirming the initial speed to prevent sudden actuator extension.**
   Due to its specifications, the extension preventing function does not have speed control capability so that adjustments are limited. Use the meter-in controlling type if desired speed is less than set speed.
2. **Circuit pressure remaining in cylinder is not usable.**
   Extension prevention works when pressure has been exhausted in cylinder. Therefore, prevent the extension by meter-in control using a speed controller in such a case.

Mounting

⚠Warning

1. **Install Actuator and SSC valve as close as possible.**
   Extensions prevention in the initial operation and standard speed control may not function.
2. **Do not use for relatively small capacity actuators. i.e. short stroke cylinders (less than 100 mm), rotary actuators, etc.**
   SSC valve may not properly operate.
3. **Use in load factor less than 50%.**
   Speed control under normal operations may not function.

Series AQ

Operation

⚠Caution

1. **In the following cases, insufficient exhaust or vibration may cause noise.**
   a) With residual pressure or back pressure on the IN side
   b) When the differential pressure between the IN and OUT sides is smaller than the min. operating pressure.

Series ASP

Caution on Design

⚠Warning

1. **This product cannot be used for accurate and precise intermediate stops of the actuator.**
   Due to the compressibility of air as a fluid, the actuator will continue to move until it reaches a position of pressure balance, even though the pilot check valve closes with an intermediate stop signal.
2. **This product cannot be used to hold a stop position for an extended period of time.**
   Pilot check valves and actuators are not guaranteed for zero air leakage. Therefore, it is sometimes not possible to hold a stop position for an extended period of time. In the event that holding for an extended time is necessary, a mechanical means for holding should be devised.
3. **Consider the release of residual pressure.**
   Actuators may move suddenly due to residual pressure, which can be dangerous during maintenance procedures.

Selection

⚠Warning

1. **When used in a balance control circuit, there are instances in which the check valve cannot release, even though the pilot pressure is 50% of the operating pressure. In these cases, the pilot pressure should be the same as the operating pressure.**
2. **For reference, SMC has conducted endurance tests in which ON, OFF operation of the check valve was performed at the maximum operating pressure, with a confirmed endurance of 10 million operations. Since the tests were performed under limited conditions, use caution in evaluating the results.**

Safety Instructions

These safety instructions are intended to prevent a hazardous situation and/or equipment damage. These instructions indicate the level of potential hazard by labels of **"Caution", "Warning"** or **"Danger"**. To ensure safety, be sure to observe ISO 4414 Note 1), JIS B 8370 Note 2) and other safety practices.

⚠ **Caution :** Operator error could result in injury or equipment damage.

⚠ **Warning :** Operator error could result in serious injury or loss of life.

⚠ **Danger :** In extreme conditions, there is a possible result of serious injury or loss of life.

Note 1) ISO 4414: Pneumatic fluid power--General rules relating to systems.
Note 2) JIS B 8370: General Rules for Pneumatic Equipment

⚠ Warning

1. The compatibility of pneumatic equipment is the responsibility of the person who designs the pneumatic system or decides its specifications.

Since the products specified here are used in various operating conditions, their compatibility for the specific pneumatic system must be based on specifications or after analysis and/or tests to meet your specific requirements. The expected performance and safety assurance will be the responsibility of the person who has determined the compatibility of the system. This person should continuously review the suitability of all items specified, referring to the latest catalog information with a view to giving due consideration to any possibility of equipment failure when configuring a system.

2. Only trained personnel should operate pneumatically operated machinery and equipment.

Compressed air can be dangerous if an operator is unfamiliar with it. Assembly, handling or repair of pneumatic systems should be performed by trained and experienced operators.

3. Do not service machinery/equipment or attempt to remove components until safety is confirmed.

1. Inspection and maintenance of machinery/equipment should only be performed once measures to prevent falling or runaway of the driver objects have been confirmed.
2. When equipment is to be removed, confirm the safety process as mentioned above. Cut the supply pressure for this equipment and exhaust all residual compressed air in the system.
3. Before machinery/equipment is restarted, take measures to prevent shooting-out of cylinder piston rod, etc.

4. Contact SMC if the product is to be used in any of the following conditions:

1. Conditions and environments beyond the given specifications, or if product is used outdoors.
2. Installation on equipment in conjunction with atomic energy, railway, air navigation, vehicles, medical equipment, food and beverages, recreation equipment, emergency stop circuits, clutch and brake circuits in press applications, or safety equipment.
3. An application which has the possibility of having negative effects on people, property, or animals, requiring special safety analysis.

Common Precautions

Be sure to read before handling.
For detailed precautions on every series, refer to main text.

Selection

⚠ Warning

1. Confirm the specifications.
Products represented in this catalog are designed for use in compressed air appllications only (including vacuum), unless otherwise indicated.
Do not use the product outside their design parameters.
Please contact SMC when using the products in applications other than compressed air (including vacuum).

Mounting

⚠ Warning

1. Instruction manual
Install the products and operate them only after reading the instruction manual carefully and understanding its contents. Also keep the manual where it can be referred to as necessary.

2. Securing the space for maintenance
When installing the products, please allow access for maintenance.

3. Tightening torque
When installing the products, please follow the listed torque specifications.

Piping

⚠ Caution

1. Before piping
Make sure that all debris, cutting oil, dust, etc, are removed from the piping.

2. Wrapping of pipe tape
When screwing piping or fittings into ports, ensure that chips from the pipe threads or sealing material do not get inside the piping. Also, when the pipe tape is used, leave 1.5 to 2 thread ridges exposed at the end of the threads.

Air Supply

⚠ Warning

1. Operating fluid
Please consult with SMC when using the product in applications other than compressed air (including vacuum).
Regarding products for general fluid, please ask SMC about applicable fluids.

2. Install an air dryer, aftercooler, etc.
Excessive condensate in a compressed air system may cause valves and other pneumatic equipment to malfunction.
Installation of an air dryer, after cooler etc. is recommended.

3. Drain flushing
If condensate in the drain bowl is not emptied on a regular basis, the bowl will over flow and allow the condensate to enter the compressed air lines.
If the drain bowl is difficult to check and remove, it is recommended that a drain bowl with the auto-drain option be installed.
For compressed air quality, refer to “Air Preparation Equipment” catalog.

4. Use clean air
If the compressed air supply is contaminated with chemicals, cynthetic materials, corrosive gas, etc., it may lead to break down or malfunction.

Operating Environment

⚠ Warning

1. Do not use in environments where the product is directly exposed to corrosive gases, chemicals, salt water, water or steam.

2. Do not expose the product to direct sunlight for an extended period of time.

3. Do not use in a place subject to heavy vibrations and/or shocks.

4. Do not mount the product in locations where it is exposed to radiant heat.

Maintenance

⚠ Warning

1. Maintenance procedures are outlined in the operation manual.
Not following proper procedures could cause the product to malfunction and could lead to damage to the equipment or machine.

2. Maintenance work
If handled improperly, compressed air can be dangerous.
Assembly, handling and repair of pneumatic systems should be performed by qualified personnel only.

3. Drain flushing
Remove drainage from air filters regularly. (Refer to the specifications.)

4. Shut-down before maintenance
Before attempting any kind of maintenance make sure the supply pressure is shut of and all residual air pressure is released from the system to be worked on.

5. Start-up after maintenance and inspection
Apply operating pressure and power to the equipment and check for proper operation and possible air leaks. If operation is abnormal, please verify product set-up parameters.

6. Do not make any modifications to be product.
Do not take the product apart.

Quality Assurance Information (ISO 9001, ISO 14001)

Reliable quality of products in the global market

To enable our customers throughout the world to use our products with even greater confidence, SMC has obtained certification for international standards “ISO 9001” and “ISO 14001”, and created a complete structure for quality assurance and environmental controls. SMC products pursue to meet its customers’ expectations while also considering company’s contribution in society.

SMC’s quality control system

Quality policies

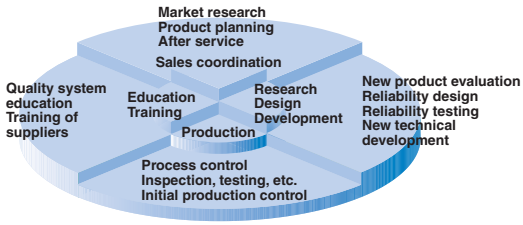

Quality control activities

Quality management system

ISO 9001

This is an international standard for quality control and quality assurance. SMC has obtained a large number of certifications in Japan and overseas, providing assurance to our customers throughout the world.



Environmental management system

ISO 14001

This is an international standard related to environmental management systems and environmental inspections. While promoting environmentally friendly automation technology, SMC is also making diligent efforts to preserve the environment.



SMC Product Conforming to Inter

SMC products complying with EN/ISO, CSA/UL standards are supporting

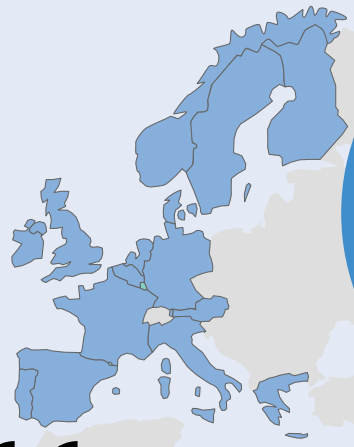

CE Mark

The CE mark indicates that machines and components meet essential requirements of all the EC Directives applied.
It has been obligatory to apply CE marks indicating conformity with EC Directives when machines and components are exported to the member Nations of the EU.
Once “A manufacturer himself” declares a product to be safe by means of CE marking (declaration of conformity by manufacturer), free distribution inside the member Nations of the EU is permissible.

■ CE Mark

SMC provides CE marking to products to which EMC and Low Voltage Directives have been applied, in accordance with CETOP (European hydraulics and pneumatics committee) guide lines.

■ As of February 1998, the following 18 countries will be obliged to conform to CE mark legislation

Iceland, Ireland, United Kingdom, Italy, Austria, Netherlands, Greece, Liechtenstein, Sweden, Spain, Denmark, Germany, Norway, Finland, France, Belgium, Portugal, Luxembourg

■ EC Directives and Pneumatic Components

• Machinery Directive

The Machinery Directive contains essential health and safety requirements for machinery, as applied to industrial machines e.g. machine tools, injection molding machines and automatic machines. Pneumatic equipment is not specified in Machinery Directive. However, the use of SMC products that are certified as conforming to EN Standards, allows customers to simplify preparation work of the Technical Construction File required for a Declaration of Conformity.

• Electromagnetic Compatibility (EMC) Directive

The EMC Directive specifies electromagnetic compatibility. Equipment which may generate electromagnetic interference or whose function may be compromised by electromagnetic interference is required to be immune to electromagnetic affects (EMS/immunity) without emitting excessive electromagnetic affects (EMI/emission).

• Low Voltage Directive

This directive is applied to products, which operate above 50 VAC to 1000 VAC and 75 VDC to 1500 VDC operating voltage, and require electrical safety measures to be introduced.

• Simple Pressure Vessels Directive

This directive is applied to welded vessels whose maximum operating pressure (PS) and volume of vessel (V) exceed 50 bar/L. Such vessels require EC type examination and then CE marking.

national Standards

you to comply with EC directives and CSA/UL standards.

Mark of compliance for CSA/UL

Mark of compliance for CSA

NRTL /C

■ CSA Standards & UL Standards

UL and CSA standards have been applied in North America (U.S.A. and Canada) symbolizing safety of electric products, and are defined to mainly prevent danger from electric shock or fire, resulting from trouble with electric products. Both UL and CSA standards are acknowledged in North America as the first class certifying body. They have a long experience and ability for issuing product safety certificate. Products approved by CSA or UL standards are accepted in most states and governments beyond question.
Since CSA is a test certifying body as the National Recognized Testing Laboratory (NRTL) within the jurisdiction of Occupational Safety and Health Administration (OSHA), SMC was tested for compliance with CSA Standards and UL Standards at the same time and was approved for compliance with the two Standards. The above CSA NRTL/C logo is described on a product label in order to indicate that the product is approved by CSA and UL Standards.

■ TSSA (MCCR) Registration Products

TSSA is the regulation in Ontario State, Canada. The products that the operating pressure is more than 5 psi (0.03 MPa) and the piping size is bigger than 1 inch. fall into the scope of TSSA regulation.

Products conforming to CE Standard

With CE symbol for simple visual recognition

In this catalog each accredited product series is indicated with a CE mark symbol. However, in some cases, every available models may not meet CE compliance. Please visit our web site for the latest selection of available models with CE mark.

http://www.smcworld.com

SMC's Global Service Network

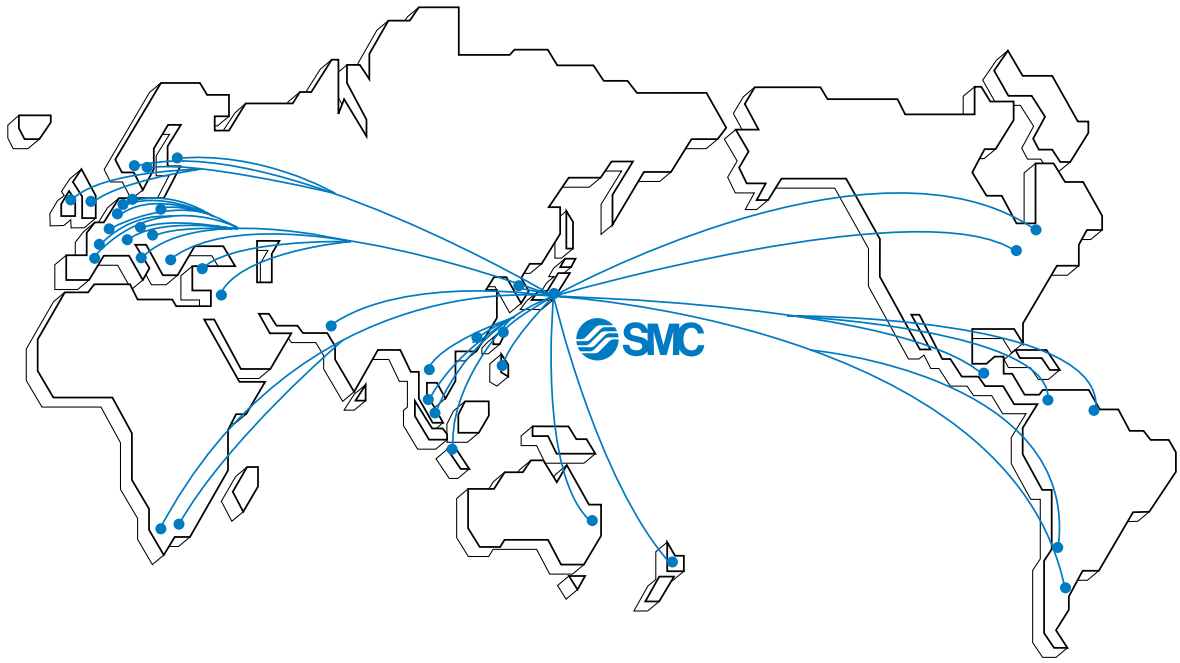

America

U.S.A. **SMC Corporation of America**
3011 North Franklin Road Indianapolis, IN 46226, U.S.A.
TEL: 317-899-4440 FAX: 317-899-3102

CANADA **SMC Pneumatics (Canada) Ltd.**
6768 Financial Drive Mississauga, Ontario, L5N 7J6 Canada
TEL: 905-812-0400 FAX: 905-812-8686

MEXICO **SMC Corporation (Mexico), S.A. DE C.V.**
Carr. Silao-Trejo K.M. 2.5 S/N, Predio San Jose del Duranzo
C.P. 36100, Silao, Gto., Mexico
TEL: 472-72-2-55-00 FAX: 472-72-2-59-44/2-59-46

CHILE **SMC Pneumatics (Chile) S.A.**
Av. La Montaña 1,115 km. 16,5 P. Norte Parque
Industrial Valle Grande, Lampa Santiago, Chile
TEL: 02-270-8600 FAX: 02-270-8601

ARGENTINA **SMC Argentina S.A.**
Teodoro Garcia 3860 (1427) Buenos Aires, Argentina
TEL: 011-4555-5762 FAX: 011-4555-5762

BOLIVIA **SMC Pneumatics Bolivia S.R.L.**
Avenida Beni Numero 4665
Santa Cruz de la Sierra-Casilla de Correo 2281, Bolivia
TEL: 591-3-3428383 FAX: 591-3-3449900

VENEZUELA **SMC Neumatica Venezuela S.A.**
Apartado 40152, Avenida Nueva Granada, Edificio Wanlac,
Local 5, Caracas 1040-A, Venezuela
TEL: 2-632-1310 FAX: 2-632-3871

PERU (Distributor) **IMPECO Automatizacion Industrial S.A.**
AV. Canevaro 752, Lince, Lima, Peru
TEL: 1-471-6002 FAX: 1-471-0935

URUGUAY (Distributor) **BAKO S.A.**
Galicia 1650 esq. Gaboto C.P. 11200, Montevideo, Uruguay
TEL: 2-401-6603 FAX: 2-409-4306

BRAZIL **SMC Pneumaticos Do Brasil Ltda.**
Rua. Dra. Maria Fidelis, nr. 130, Jardim Piraporinha-Diadema-S.P.
CEP: 09950-350, Brasil
TEL: 11-4051-1177 FAX: 11-4071-6636

COLOMBIA (Distributor) **Airmatic Ltda.**
Calle 18 69-05 Apart. Aereo 081045 Santa Fe de Bogotá, Colombia
TEL: 1-424-9240 FAX: 1-424-9260

Europe

U.K. **SMC Pneumatics (U.K.) Ltd.**
Vincent Avenue, Crownhill, Milton Keynes, MK8 0AN, Backinghamshire, U.K.
TEL: 01908-563888 FAX: 01908-561185

GERMANY **SMC Pneumatik GmbH**
Boschring 13-15 D-63329 Egelsbach, Germany
TEL: 06103-4020 FAX: 06103-402139

ITALY **SMC Italia S.p.A.**
Via Garibaldi 62 I-20061 Carugate Milano, Italy
TEL: 02-9271365 FAX: 02-9271365

FRANCE **SMC Pneumatique S.A.**
1 Boulevard de Strasbourg, Parc Gustave Eiffel, Bussy Saint Georges, F-77600
Marne La Vallee Cedex 3 France
TEL: 01-64-76-10-00 FAX: 01-64-76-10-10

SWEDEN **SMC Pneumatics Sweden AB**
Ekhagsvägen 29-31, S-141 05 Huddinge, Sweden
TEL: 08-603-07-00 FAX: 08-603-07-10

SWITZERLAND **SMC Pneumatik AG**
Dorfstrasse 7, Postfach 117, CH-8484 Weisslingen, Switzerland
TEL: 052-396-3131 FAX: 052-396-3191

AUSTRIA **SMC Pneumatik GmbH (Austria)**
Girakstrasse 8, A-2100 Korneuburg, Austria
TEL: 0-2262-6228-0 FAX: 0-2262-62285

SPAIN **SMC España, S.A.**
Zuazobidea 14 Pol. Ind. Júndiz 01015 Vitoria, Spain
TEL: 945-184-100 FAX: 945-184-510

IRELAND **SMC Pneumatics (Ireland) Ltd.**
2002 Citywest Business Campus, Naas Road, Saggart, Co. Dublin, Ireland
TEL: 01-403-9000 FAX: 01-466-0385

NETHERLANDS (Associated company) **SMC Pneumatics BV**
De Ruyterkade 120, NL-1011 AB Amsterdam, Netherlands
TEL: 020-5318888 FAX: 020-5318880

GREECE (Distributor) **S.Parianopoulos S.A.**
7, Konstantinoupoleos Street 11855 Athens, Greece
TEL: 01-3426076 FAX: 01-3455578

DENMARK **SMC Pneumatik A/S**
Knudsminde 4 B DK-8300
Odder, Denmark
TEL: 70252900 FAX: 70252901

Europe

FINLAND **SMC Pneumatics Finland OY**
PL72, Tiistinniityntie 4, SF-02231 ESP00, Finland
TEL: 09-8595-80 FAX: 09-8595-8595

NORWAY **SMC Pneumatics Norway A/S**
Vollsveien 13C, Granfoss Næringspark N-1366 LYSAKER, Norway
TEL: 67-12-90-20 FAX: 67-12-90-21

BELGIUM (Distributor) **SMC Pneumatics N.V./S.A.**
Nijverheidsstraat 20 B-2160 Wommelgem Belguim
TEL: 03-355-1464 FAX: 03-355-1466

POLAND **SMC Industrial Automation Polska Sp.z.o.o.**
ul. Konstruktorska 11A, PL-02-673 Warszawa, Poland
TEL: 022-548-5085 FAX: 022-548-5087

TURKEY (Distributor) **Entek Pnömatik San.ve Tic. Ltd. Sti**
Perpa Tic. Merkezi Kat:11 No.1625 80270 Okmeydani Istanbul, Türkiye
TEL: 0212-221-1512 FAX: 0212-221-1519

RUSSIA **SMC Pneumatik LLC.**
36/40 Sredny prospect V.O. St. Petersburg 199004, Russia
TEL: 812-118-5445 FAX: 812-118-5449

CZECH **SMC Industrial Automation CZ s.r.o.**
Hudcova 78a, CZ-61200 Brno, Czech Republic
TEL: 05-4121-8034 FAX: 05-4121-8034

HUNGARY **SMC Hungary Ipari Automatizálási kft.**
Budafoki ut 107-113 1117 Budapest
TEL: 01-371-1343 FAX: 01-371-1344

ROMANIA **SMC Romania S.r.l.**
Str. Frunzei, Nr. 29, Sector 2, Bucharest, Romania
TEL: 01-3205111 FAX: 01-3261489

SLOVAKIA **SMC Priemyselná automatizáciá, s.r.o**
Nova 3, SK-83103 Bratislava
TEL: 02-4445-6725 FAX: 02-4445-6028

SLOVENIA **SMC Industrijska Avtomatilca d.o.o.**
Grajski trg 15, SLO- 8360 Zuzemberk, Slovenia
TEL: 07388-5240 FAX: 07388-5249

LATVIA **SMC Pneumatics Latvia SIA**
Šmerļa ielā 1-705, Rīga LV-1006
TEL: 777 94 74 FAX: 777 94 75

SOUTH AFRICA (Distributor) **Hyflo Southern Africa (Pty.) Ltd.**
P.O.Box 240 Paardeneiland 7420 South Africa
TEL: 021-511-7021 FAX: 021-511-4456

EGYPT (Distributor) **Saadani Trading & Ind. Services**
15 Sebaai Street, Miami 21411 Alexandria, Egypt
TEL: 3-548-50-34 FAX: 3-548-50-34

Oceania/Asia

AUSTRALIA **SMC Pneumatics (Australia) Pty.Ltd.**
14-18 Hudson Avenue Castle Hill NSW 2154, Australia
TEL: 02-9354-8222 FAX: 02-9894-5719

NEW ZEALAND **SMC Pneumatics (New Zealand) Ltd.**
8C Sylvia Park Road Mt.Wellington Auckland, New Zealand
TEL: 09-573-7007 FAX: 09-573-7002

TAIWAN **SMC Pneumatics (Taiwan) Co.,Ltd.**
17, Lane 205, Nansan Rd., Sec.2, Luzhu-Hsiang, Taoyuan-Hsien, TAIWAN
TEL: 03-322-3443 FAX: 03-322-3387

HONG KONG **SMC Pneumatics (Hong Kong) Ltd.**
29/F, Clifford Centre, 778-784 Cheung, Sha Wan Road, Lai Chi Kok, Kowloon,
Hong Kong
TEL: 2744-0121 FAX: 2785-1314

SINGAPORE **SMC Pneumatics (S.E.A.) Pte. Ltd.**
89 Tuas Avenue 1, Jurong Singapore 639520
TEL: 6861-0888 FAX: 6861-1889

PHILIPPINES **SHOKETSU SMC Corporation**
Unit 201 Common Goal Tower, Madrigal Business Park,
Ayala Alabang Muntinlupa, Philippines
TEL: 02-8090565 FAX: 02-8090586

MALAYSIA **SMC Pneumatics (S.E.A.) Sdn. Bhd.**
Lot 36 Jalan Delima1/1, Subang Hi-Tech Industrial Park, Batu 3 40000 Shah Alam
Selangor, Malaysia
TEL: 03-56350590 FAX: 03-56350602

SOUTH KOREA **SMC Pneumatics Korea Co., Ltd.**
Woolim e-BIZ Center (Room 1008), 170-5, Guro-Dong, Guro-Gu,
Seoul, 152-050, South Korea
TEL: 02-3219-0700 FAX: 02-3219-0702

CHINA **SMC (China) Co., Ltd.**
7 Wan Yuan St. Beijing Economic & Technological Development Zone 100176, China
TEL: 010-67882111 FAX: 010-67881837

THAILAND **SMC Thailand Ltd.**
134/6 Moo 5, Tiwanon Road, Bangkadi, Amphur Muang, Patumthani 12000, Thailand
TEL: 02-963-7099 FAX: 02-501-2937

INDIA **SMC Pneumatics (India) Pvt. Ltd.**
D-107 to 112, Phase-2, Extension, Noida, Dist. Gautaim Budh Nagar,
U.P. 201 305, India
TEL: (0120)-4568730 FAX: 0120-4568933

INDONESIA (Distributor) **P.T. Riyadi Putera Makmur**
Jalan Hayam Wuruk Komplek Glodok Jaya No. 27-28 Jakarta 11180 Indonesia
TEL: 021-625 5548 FAX: 021-625 5888

PAKISTAN (Distributor) **Jubilee Corporation**
First Floor Mercantile Centre, Newton Road Near Boulton Market P.O. Box 6165
Karachi 74000 Pakistan
TEL: 021-243-9070/8449 FAX: 021-241-4589

ISRAEL (Distributor) **Baccara Automation Control**
Kvutzat Geva 18915 Israel
TEL: 04-653-5960 FAX: 04-653-1445

SAUDI ARABIA (Distributor) **Assaggaff Trading Est.**
P.O. Box 3385 Al-Amir Majed Street, Jeddah-21471, Saudi Arabia
TEL: 02-6761574 FAX: 02-6708173

SMC Information

SMC Corporation
Akihabara UDX 15F,
4-14-1, Sotokanda, Chiyoda-ku,
Tokyo 101-0021, JAPAN
URL http://www.smcworld.com

06-E533 Issued: June, 2006
D-DNP P-120 (DN)

Stainless Steel Speed Controller (Elbow Type)
Series ASG

Material:
Stainless steel 316
(**Sealant: Special FKM**
Seat ring: Stainless steel 303)

Applicable tubing materials
- **FEP**
- **PFA**
- **Nylon**
- **Soft nylon**
- **Polyurethane**
- **Polyolefin**

JIS Symbol

Meter-out type	Meter-in type
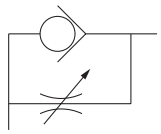	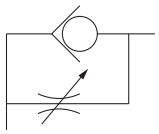

Conforms to Food Sanitation Laws
(Material of the component parts meets the apparatus and container packaging standards.)

Flow Rate and Effective Area

Model		ASG22□F-M5	ASG32□F-01		ASG42□F-02		ASG52□F-03		ASG62□F-04
Tubing O.D. (mm)		ø4, ø6	ø4	ø6, ø8	ø6	ø8, ø10	ø8	ø10, ø12	ø12
Controlled (free) flow	Flow rate (ℓ/min (ANR))	100	180	230	390	460	790	920	1580
	Effective area (mm^2)	1.5	2.7	3.5	6	7	12	14	24

Note) Flow rate is measured at 0.5 MPa and 20C.

Model

Elbow type	Port size	Applicable tubing O.D. (mm)					Applicable cylinder bore size (mm)
		4	6	8	10	12	
ASG22□F-M5	M5 x 0.8	●	●				6, 10, 16, 20
ASG32□F-01	R1/8	●	●	●			20, 25, 32
ASG42□F-02	R1/4		●	●	●		20, 25, 32, 40
ASG52□F-03	R3/8			●	●	●	40, 50, 63
ASG62□F-04	R1/2					●	63, 80, 100

Specifications

Fluid	Air
Proof pressure	1.5 MPa
Max. operating pressure	1 MPa
Min. operating pressure	0.1 MPa
Ambient and fluid temperature	–5 to 60C (No freezing)
Number of needle rotations	10 turns (8 turns Note 1))
Applicable tubing material	FEP, PFA, Nylon, Soft nylon, Polyurethane Note 3), Polyolefin

Note 1) In case of ASG22□F-M5
Note 2) Please be cautious of the max. operating pressure when soft nylon or polyurethane tubing is used.
Note 3) When polyurethane tubing is used, please use an inner sleeve.

How to Order

AS G 3 2 0 F – 01 – 06 S

Speed controller

Body material

G	Stainless steel

Body size

2	M5
3	1/8
4	1/4
5	3/8
6	1/2

Type

2	Elbow

Control type

0	Meter-out
1	Meter-in

With one-touch fitting

Port size

M5	M5 x 0.8
01	R1/8
02	R1/4
03	R3/8
04	R1/2

Applicable tubing O.D.

04	ø4
06	ø6
08	ø8
10	ø10
12	ø12

With seal
∗ In the case of M5, seal is inapplicable to the product.

Needle Valve: Flow Characteristics

ASG220F-M5
ASG221F-M5

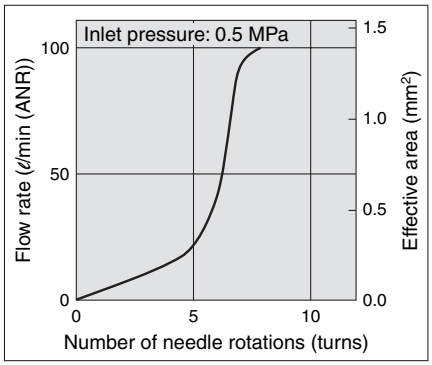

ASG320F-01
ASG321F-01

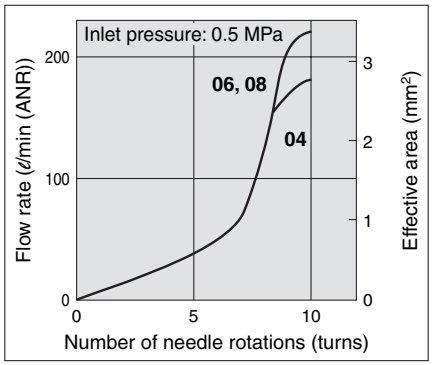

ASG420F-02
ASG421F-02

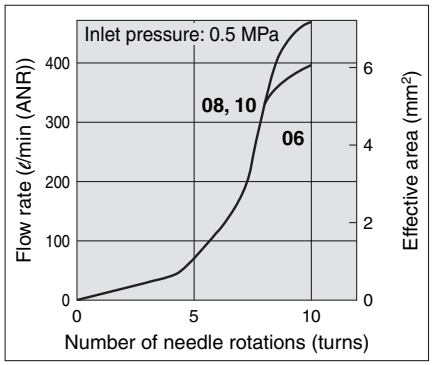

ASG520F-03
ASG521F-03

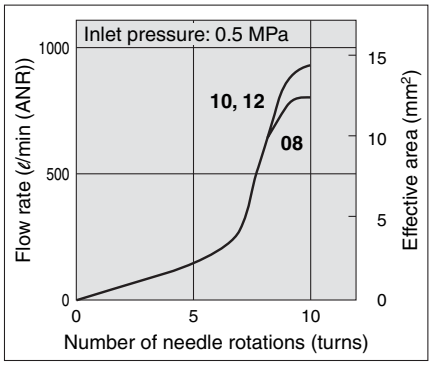

ASG620F-04
ASG621F-04

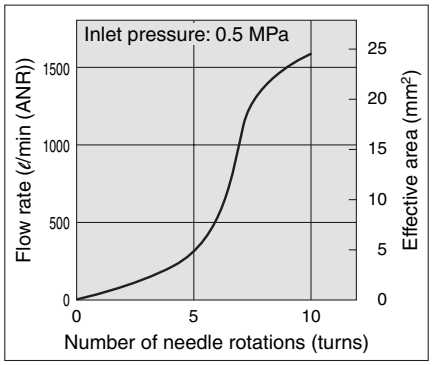

Construction

Elbow type

Meter-out

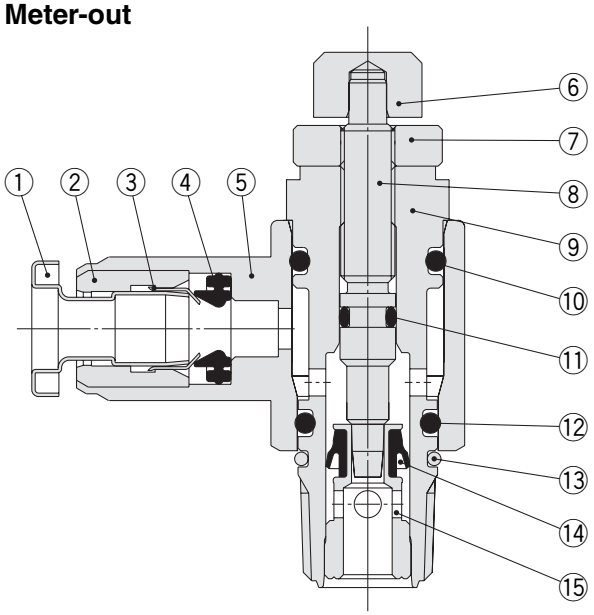

Meter-in

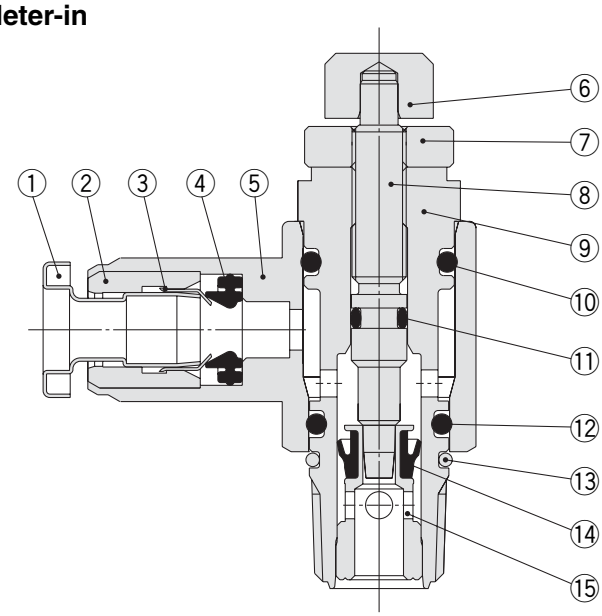

M5 port

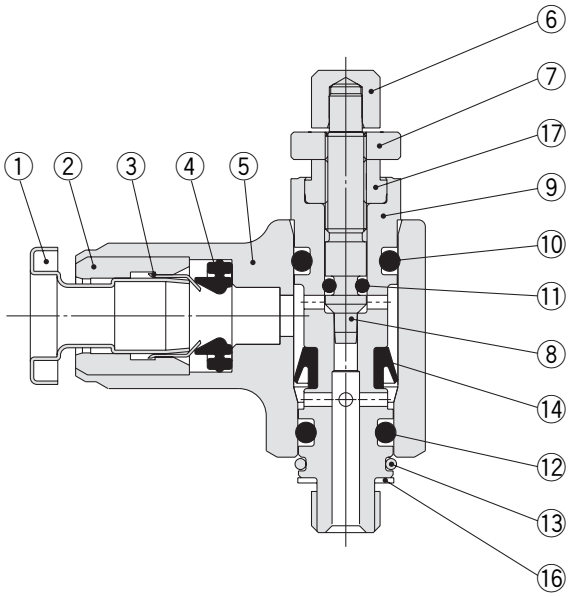

M5 port

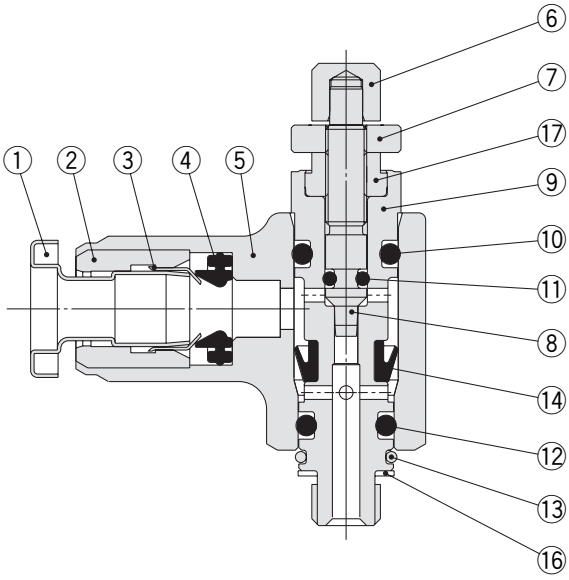

Component Parts

No.	Description	Material
1	**Release button**	Stainless steel 316
2	**Guide**	Stainless steel 316
3	**Chuck**	Stainless steel 316
4	**Seal**	Special FKM
5	**Body A**	Stainless steel 316
6	**Handle**	Stainless steel 316
7	**Lock nut**	Stainless steel 316
8	**Needle**	Stainless steel 316
9	**Body B**	Stainless steel 316

No.	Description	Material
10	**O-ring**	Special FKM
11	**O-ring**	Special FKM
12	**O-ring**	Special FKM
13	**Ring**	Stainless steel 316
14	**U-seal**	FKM
15	**Seat ring**	Stainless steel 303
16	**Gasket**	Stainless steel 316, Special FKM
17	**Needle guide**	Stainless steel 316

Dimensions

ASG22□F-M5

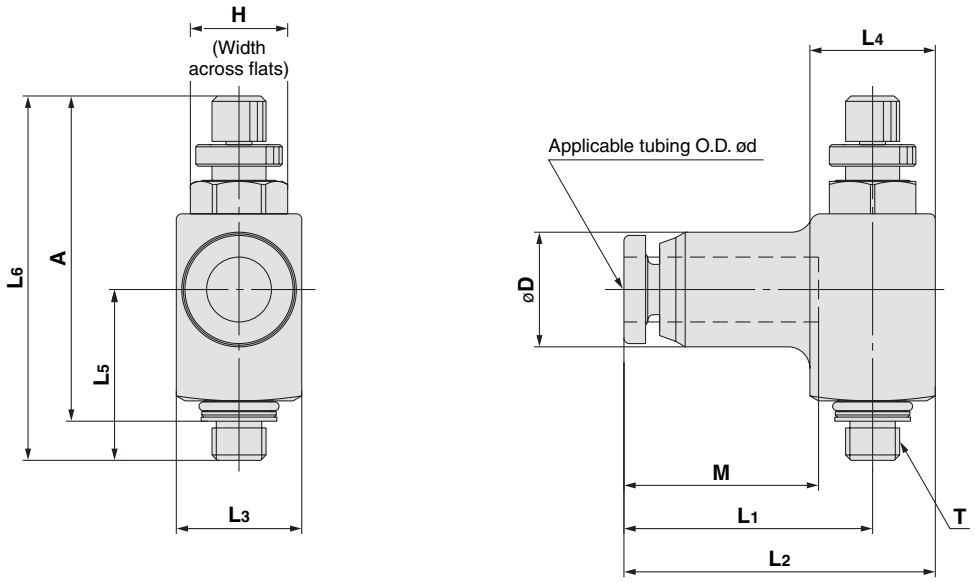

ASG32□F-01
ASG42□F-02
ASG52□F-03
ASG62□F-04

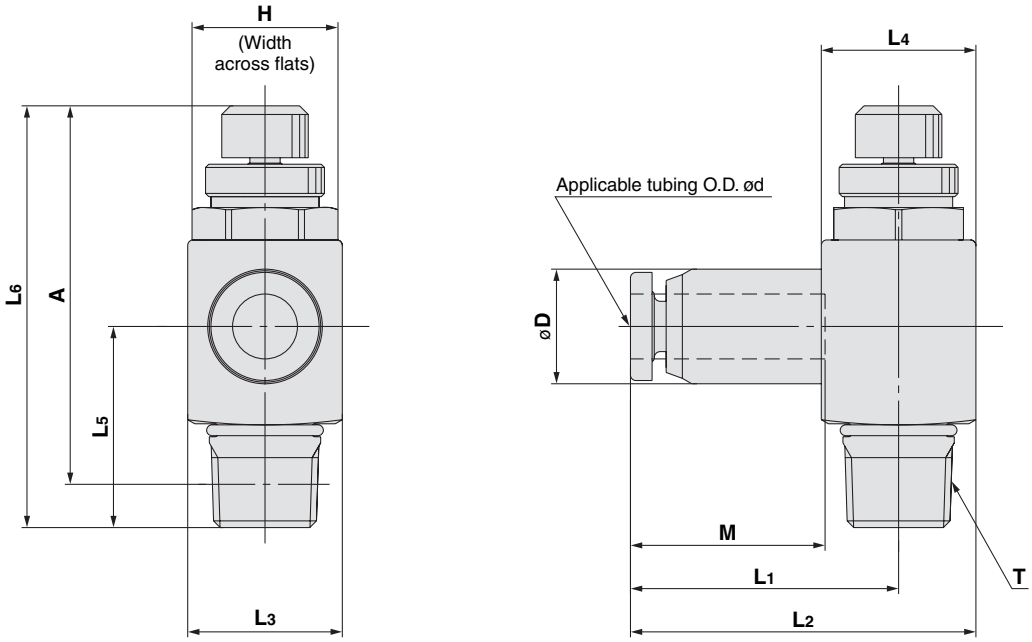

Model	Applicable tubing O.D. ød	T	H	D	L_1	L_2	L_3	L_4	L_5	L_6		A Note)		M	Weight (g)
										Max.	Min.	Max.	Min.		
ASG22□F-M5-04	4	M5 x 0.8	8	10.6	23	28.8	11.6		15.8	37.2	33.7	33.7	30.2	18.2	25.2
ASG22□F-M5-06	6			13	23.6	30.6	14							18.8	34.4
ASG32□F-01-04S	4	1/8	12	10.6	24.8	32	14.3		18.6	44	39	40	35	18.2	39.4
ASG32□F-01-06S	6			13	25.4	32.6	14.3							18.8	42.4
ASG32□F-01-08S	8			15	27.5	35.5	16							20.9	52.4
ASG42□F-02-06S	6	1/4	17	13	27.3	36.2	17.9		24.2	53.5	48.5	47.5	42.5	18.8	76.8
ASG42□F-02-08S	8			15	29.4	38.3	17.9							20.9	80.3
ASG42□F-02-10S	10			18	31.9	41.4	19							23	93.6
ASG52□F-03-08S	8	3/8	19	15	31.1	41.7	21.2		26.5	58.7	53.7	52.7	47.7	20.9	117.0
ASG52□F-03-10S	10			18	33.6	44.2	21.2							23	124.9
ASG52□F-03-12S	12			20.8	35.4	46.3	21.8							24.8	137.8
ASG62□F-04-12S	12	1/2	24	20.8	37.6	50.5	25.8		30	65.9	58.4	54.3	46.8	24.8	186.8

Note) Reference thread dimensions after installation.