CUSTOMER	NEWARK (MCM)	FILE NO.	AR70736-NEW

REV.	DESCRIPTION	DRAWN / DATE	APPROVED / DATE
0	INITIAL RELEASE	LIN 12/26/2017	BERNINI 12/26/2017

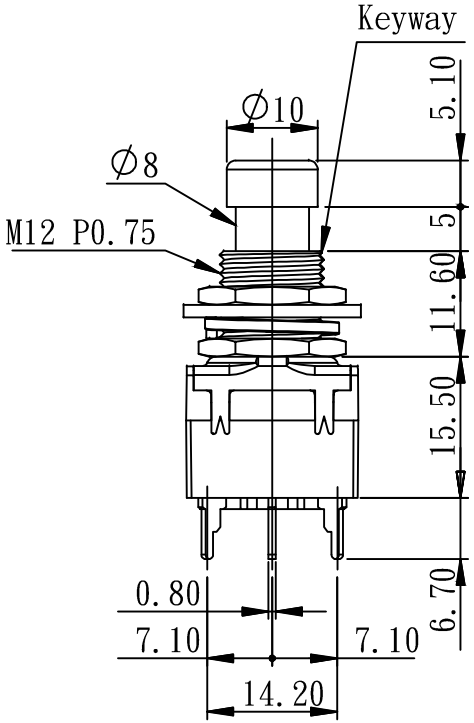

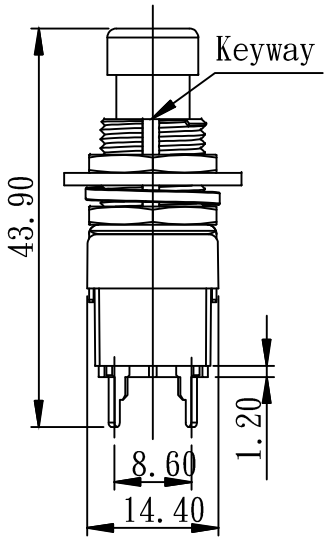

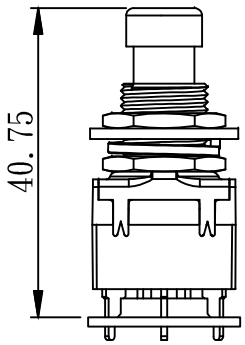

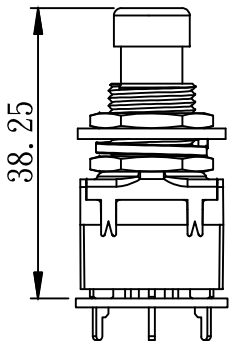

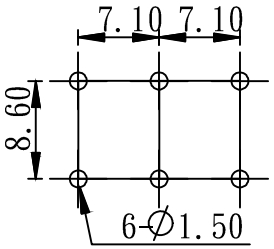

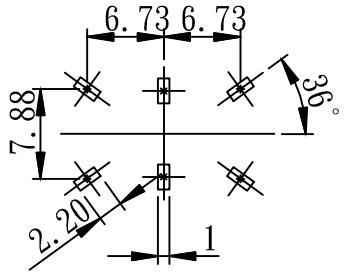

PC MOUNTING

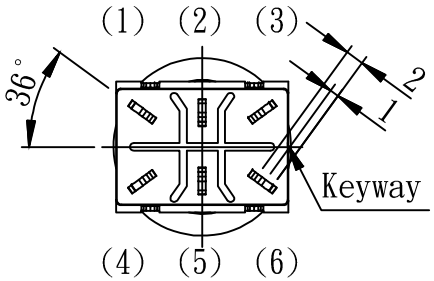

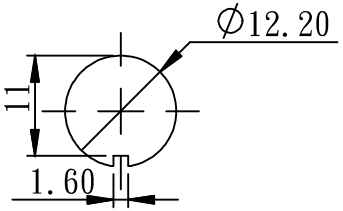

Panel Thickness:
3.0mm Max.

Type	Terminal Quantity	Terminal Specification	Circuitry Trait	
DPDT	6P	PC	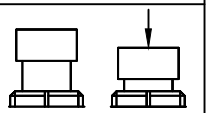	
			ON	ON
			1-2	2-3
			4-5	5-6

1.Rating : AC 125V 4A 250V 2A
2.Contact R. : 50mΩ Max.
3.Insulation R. : DC 500V 100MΩ Min.
4.Dielectric Strenth : AC 1500V 1 minute.
5.Electrical Life : 50,000 make-and-break cycles at full load.
6.Opeating temperature : -20℃~65℃

RoHS

DIMENSIONS ARE IN mm [INCH]	TOLERANCES ARE FRACTIONS DECIMALS ANGLES	MATERIAL		PUSH BUTTON SWITCH 6A DPDT TYPE	P/N AR70736-NEW	DRAWN LIN	DATE 12/26/2017
MOLD NO.	.x ±0.2 [0.008]	FINISH			PROJECT NO.		
AR70736-NEW	.xx ±0.12[0.005]	COLOR			SCALE 1.2:1 SIZE A4 SHEET 1 OF 1		MY018