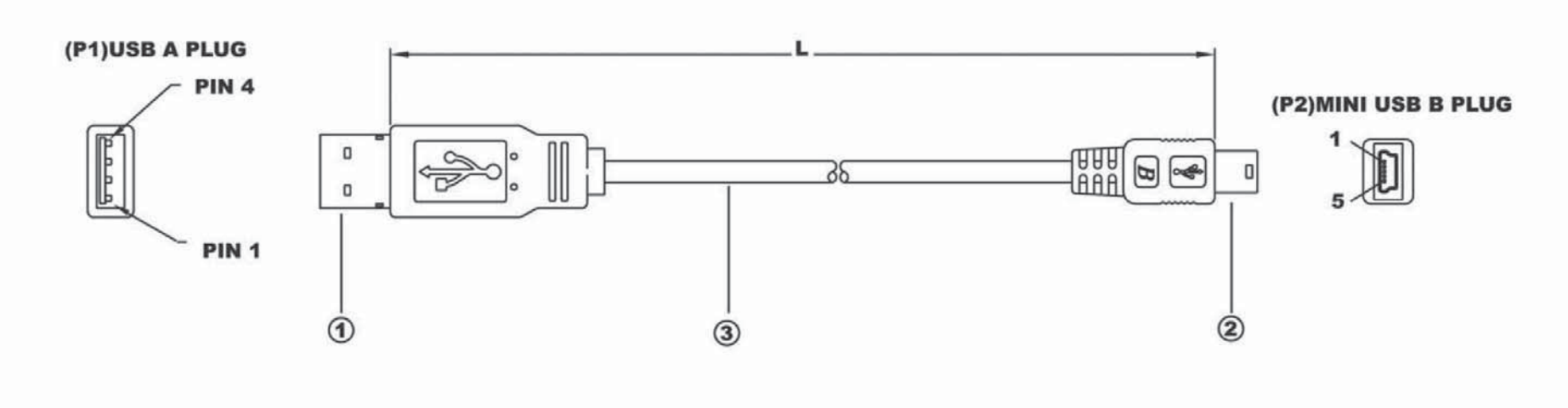

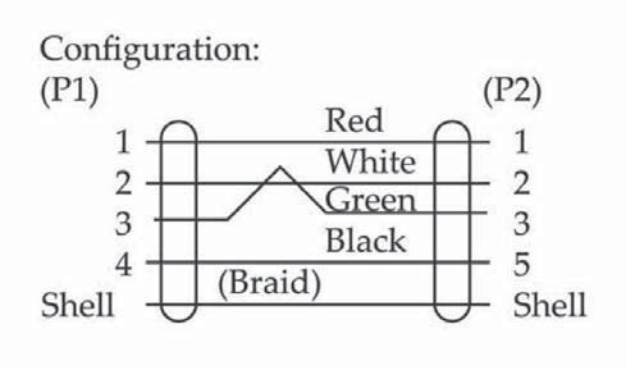

Material:
1. Cable: UL2725, #28x1P+#28x2C+AL/MY Braid, O.D:3.8
2. Connector: USB A Plug, MINI USB 5P B Plug

Note:
1. Total Length: L
2. Color: Black
3. Molded Type

Item No.	L
AK672M-1	1,000±30mm
AK672M-2	2,000±50mm
AK672M-3	3,000±50mm
AK672M-5	5,000±50mm

RoHS Complaint

Scale	1:1							Name
TOLERANCE						Drawn	08.29.11	Chappell
X.X	±0.40					Approved		
X.XX	±0.25							
X.XXX	±0.15							
Angle	±3°							
			Modification	Date	Name			

ASSMANN WSW components

Item No.
AK672M-XP-R (Version 1.1)
AK672M/2-X-R (Version 2.0)

Title
USB Mini Cable 1.1 & 2.0,
USB A Male to USB B Mini (5 pin)

Drawing No.

rev00

Replace

Sheet