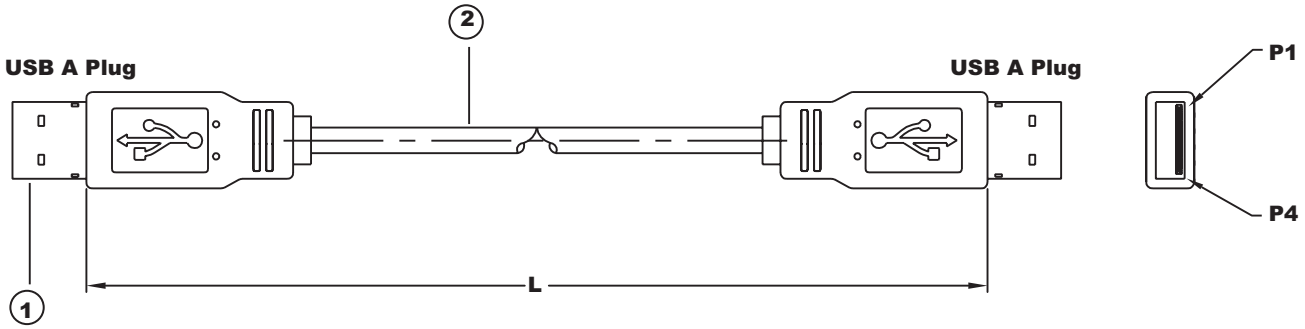

Configuration:

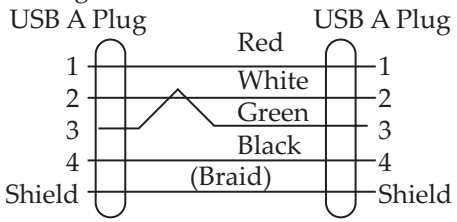

Material:

1.Cable:Revision 2.0 UL2725, #28X1P +#24X2C+1+AL/MY+Braid, O.D:4.7
2.Connector: USB A Plug, 30u"

Note:

1.Total Length: L
2.Color:Beige
3.Molded Type

Item No.	L
AK670/2-1	1000±30mm
AK670/2	2000±50mm
AK670/2-3	3000±50mm
AK670/2-5	5000±50mm

Description

Name: AK670-2-X-R

Revision 2.0 Cable
USB A Plug-USB A Plug

ASSMANN Electronic Components

RoHS Compliant

THIS DRAWING IS UNPUBLISHED

© Copyright 2005 by Assmann Electronic Components All International Rights Reserved

This drawing is a controlled document for Assmann Electronics, Inc. It is subject to change and the controlling engineering organization should be contacted for the latest revision.