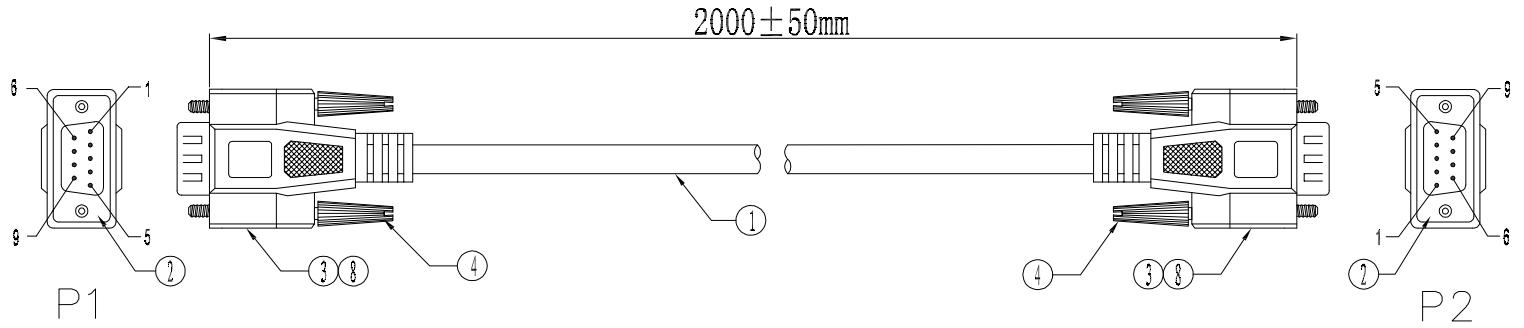

Electronic Test:
1.100% Test,(Open,Short,Miss Wire)
2.Contact Resistance:2 ohm max.
3.Insulation Resistance:5M ohm min.
4.Hi-Pot:300V DC/10ms

PIN ASSIGNMENT

P1		P2
1	BLACK	1
2	GREY	2
3	YELLOW	3
4	PURPLE	4
5	ORANGE	5
6	RED	6
7	BROWN	7
8	GREEN	8
9	BLUE	9
SHELL	D.W	SHELL

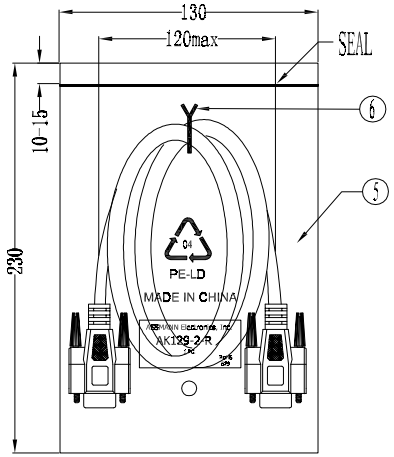

1PCS/PE BAG

NO.	NAME	Q'TY	SPECIFICATION
⑧	TUBE	2	HEAT SHRINK TUBE BLACK OD1.5*L15MM
⑦	PE BAG	1/10	CLEAR SIZE:330*230*0.05mm, PRINT BLACK"MADE INCHINA"
⑥	TIE	1	WHITE L=100mm
⑤	PE BAG	1	CLEAR SIZE:130*230*0.05mm, PRINT BLACK"MADE INCHINA"
④	SCREW	4	SCREW:#4-40UNC D-E L32.5,NICKEL PLATED,INSULATION COLOR BEIGE(IV-29)
③	OUT JACKET	43.5g	BEIGE(IV-29) 40P PVC(MOULD NO:WM-113)
	IN JACKET	8g	CLEAR LDPE(MOULD NO:NM-049)
②	CONN	2	DB 9PIN MALE PIN G/F SHELL-NICKEL SOLDER TYPE INSULATION COLOR BLUE
①	CABLE	1	NOUL 30AWG(7/0.10)*9C+D.W+AL/MY+JACKET COROL:BEIGE(IV-29) OD:5.0mm. L2000±10mm.

RoHS compliant
unit:mm

Scale	FREE
TOLERANCE	
DIM	TOL
X.°	±X°
X.X°	±X°
Angle	TOL

Id.	Modification	Date	Name
0	Drawn	18.02.2014	Winnie

	Date	Name
Drawn	18.02.2014	Winnie
Approved	18.02.2014	Winnie

ASSMANN WSW components

Customer-No.

ASSMANN WSW-No. AK129-2-R

Drawing-No. ASS 7083 CA

rev00

Replace

Sheet 1/1

UNI4015