Kingbright

3.5x2.8mm SURFACE MOUNT LED LAMP

ATTENTION
OBSERVE PRECAUTIONS
FOR HANDLING
ELECTROSTATIC
DISCHARGE
SENSITIVE
DEVICES

Part Number: AA3528VRBXS/A-SC-AMT Blue

Features

- Industry standard PLCC-2 package.
- High reliability LED package.
- Wide viewing angle.
- Single color.
- Suitable for all SMT assembly and solder process.
- Available on tape and reel.
- Ideal for backlighting.
- Package : 1500pcs / reel.
- Moisture sensitivity level : level 3.
- RoHS compliant.

Description

The source color devices are made with InGaN Light Emitting Diode.
Static electricity and surge damage the LEDS.
It is recommended to use a wrist band or anti-electrostatic glove when handling the LEDs.
All devices, equipment and machinery must be electrically grounded.

Applications

- Traffic signaling.
- Backlighting (illuminated advertising , general lighting).
- Interior and exterior automotive lighting.
- Substitution of micro incandescent lamps.
- Reading lamps.
- Signal and symbol luminaire for orientation.
- Marker lights (e.g. Steps, exit ways, etc).
- Decorative and entertainment lighting.
- Indoor and outdoor commercial and residential architectural lighting.

Package Dimensions

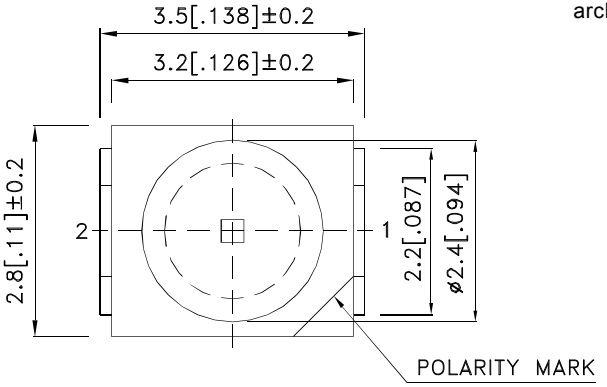

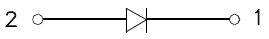

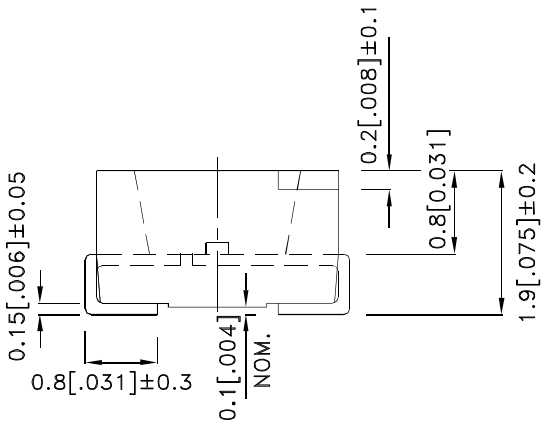

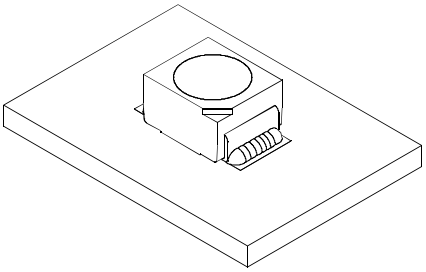

Notes:
1. All dimensions are in millimeters (inches).
2. Tolerance is ±0.25(0.01") unless otherwise noted.
3. The specifications, characteristics and technical data described in the datasheet are subject to change without prior notice.
4. The device has a single mounting surface. The device must be mounted according to the specifications.

Handling Precautions

Compare to epoxy encapsulant that is hard and brittle, silicone is softer and flexible. Although its characteristic significantly reduces thermal stress, it is more susceptible to damage by external mechanical force.
As a result, special handling precautions need to be observed during assembly using silicone encapsulated LED products. Failure to comply might lead to damage and premature failure of the LED.

1. Handle the component along the side surfaces by using forceps or appropriate tools.

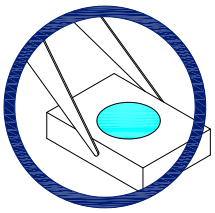

2. Do not directly touch or handle the silicone lens surface. It may damage the internal circuitry.

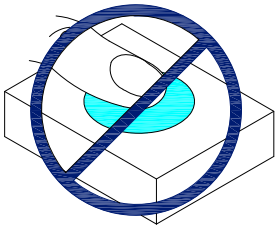

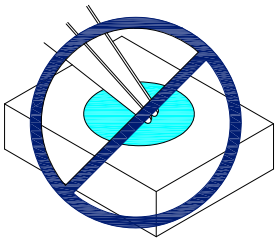

3. Do not stack together assembled PCBs containing exposed LEDs. Impact may scratch the silicone lens or damage the internal circuitry.

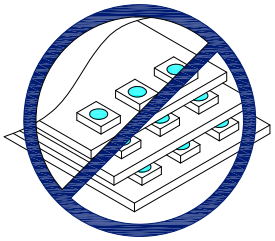

4.1. The outer diameter of the SMD pickup nozzle should not exceed the size of the LED to prevent air leaks. The inner diameter of the nozzle should be as large as possible.
4.2. A pliable material is suggested for the nozzle tip to avoid scratching or damaging the LED surface during pickup.
4.3. The dimensions of the component must be accurately programmed in the pick-and-place machine to insure precise pickup and avoid damage during production.

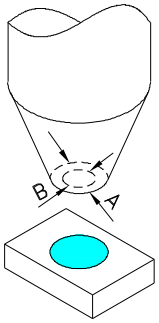

5. As silicone encapsulation is permeable to gases, some corrosive substances such as H_2S might corrode silver plating of leadframe. Special care should be taken if an LED with silicone encapsulation is to be used near such substances.

Selection Guide

Part No.	Dice	Lens Type	Iv (mcd) [2] @ 20mA			Viewing Angle [1]
			Code.	Min.	Max.	2θ1/2
AA3528VRBXS/A-SC-AMT	Blue (InGaN)	Water Clear	T	700	1000	120°
			U	1000	1300	
			V	1300	1600	

Notes:
1. θ1/2 is the angle from optical centerline where the luminous intensity is 1/2 of the optical peak value.
2. Luminous intensity/ luminous Flux: +/-15%.

Absolute Maximum Ratings at Ta=25°C

Parameter	Symbol	Value	Unit
Power dissipation	P_D	120	mW
Reverse Voltage	V_R	5	V
Junction temperature	T_J	110	°C
Operating Temperature	Top	-40 To +100	°C
Storage Temperature	Tstg	-40 To +110	°C
DC Forward Current[1]	I_F	30	mA
Peak Forward Current [2]	I_{FM}	100	mA
Electrostatic Discharge Threshold (HBM)		250	V
Thermal Resistance (Junction/ambient) [1]	$R_{th\ j\text{-}a}$	300	°C/W

Notes:
1. Rth(j-a) Results from mounting on PC board FR4 (pad size≥16 mm^2 per pad),
2. 1/10 Duty Cycle, 0.1ms Pulse Width.

Electrical / Optical Characteristics at Ta=25°C

Parameter	Symbol	Value	Unit
Chromaticity Coordinates IF=20mA	X [1]	0.19	-
	Y[1]	0.19	-
Forward Voltage IF=20mA [Min.]	VF [2]	-	V
Forward Voltage IF=20mA [Typ.]		3.3	
Forward Voltage IF=20mA [Max.]		4.0	
Reverse Current (VR = 5V) [Max.]	IR	50	uA
Temperature coefficient of VF IF=20mA, -10°C≤ T≤100°C [Typ.]	TC_V	-2.2	mV/°C
Temperature coefficient of X IF=20mA, -10°C≤ T≤100°C [Typ.]	TC_x	-0.1	10-3/°C
Temperature coefficient of Y IF=20mA, -10°C≤ T≤100°C [Typ.]	TC_y	-0.2	10-3°C

Notes:
1.Measurement tolerance of the chromaticity coordinates is ±0.01.
2.Forward Voltage: +/-0.1V.

Blue **AA3528VRBXS/A-SC-AMT**

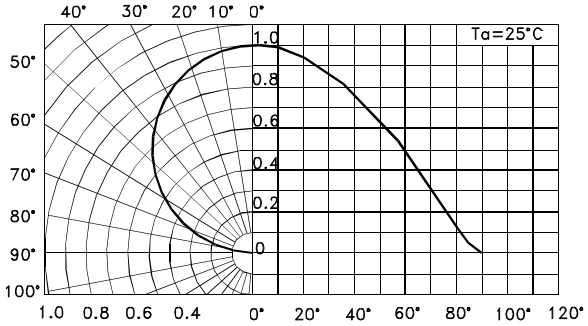

SPATIAL DISTRIBUTION

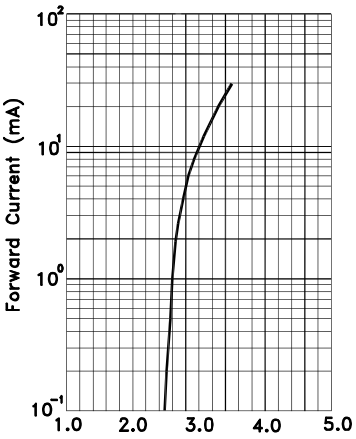

Forward voltage (V)
FORWARD CURRENT Vs.
FORWARD VOLTAGE

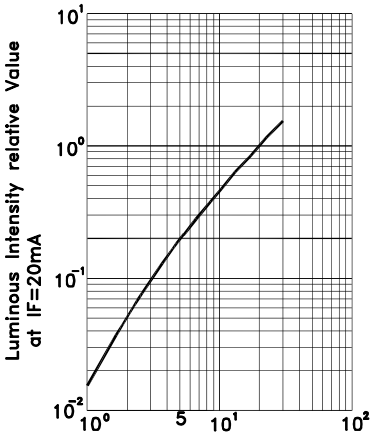

Forward current (mA)
LUMINOUS INTENSITY Vs.
FORWARD CURRENT

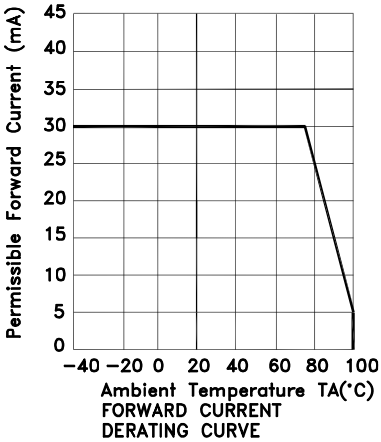

Ambient Temperature TA(°C)
FORWARD CURRENT
DERATING CURVE

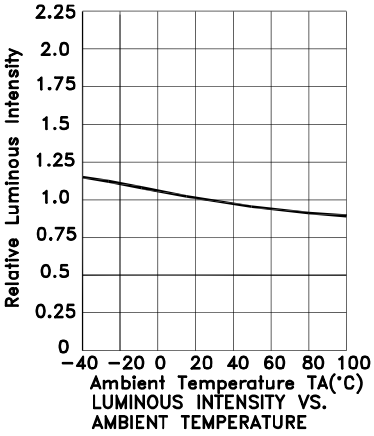

Ambient Temperature TA(°C)
LUMINOUS INTENSITY VS.
AMBIENT TEMPERATURE

AA3528VRBXS/A-SC-AMT

CIE 1931

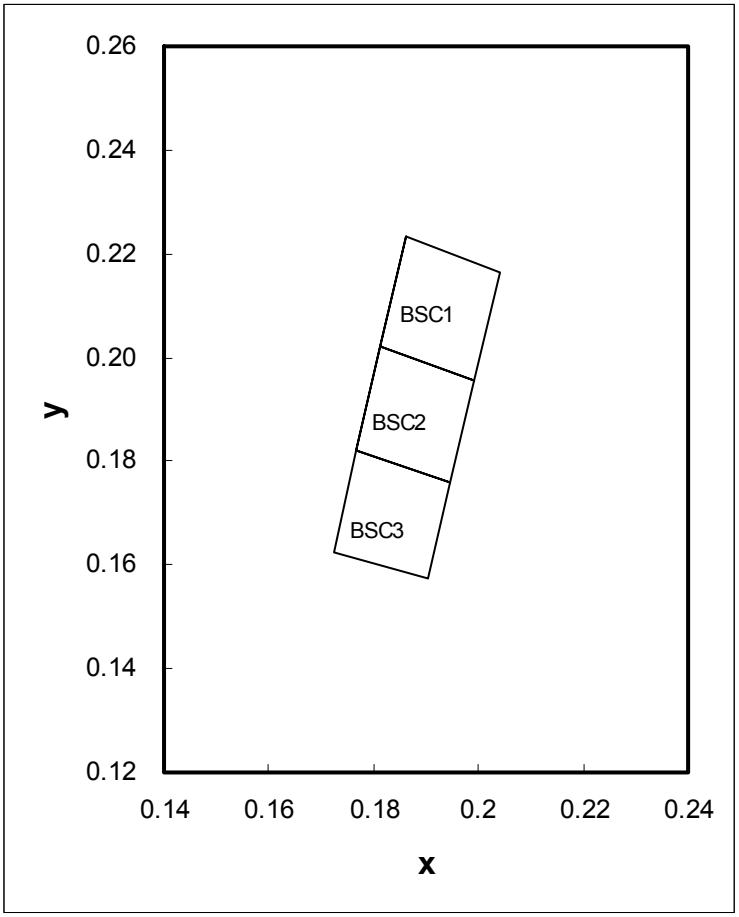

Bin code	x	y	Bin code	x	y	Bin code	x	y
BSC1	0.1861	0.2232	BSC2	0.1813	0.2021	BSC3	0.1767	0.1819
	0.1813	0.2021		0.1767	0.1819		0.1723	0.1626
	0.1993	0.1957		0.1947	0.1760		0.1903	0.1572
	0.2040	0.2163		0.1993	0.1957		0.1947	0.1760

Notes:
Shipment may contain more than one chromaticity regions.
Orders for single chromaticity region are generally not accepted.
Measurement tolerance of the chromaticity coordinates is ±0.01.

AA3528VRBXS/A-SC-AMT

Reflow soldering is recommended and the soldering profile is shown below.
Other soldering methods are not recommended as they might cause damage to the product.

Reflow Soldering Profile For Lead-free SMT Process.

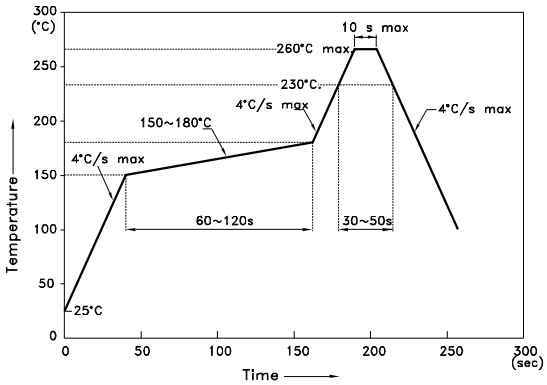

NOTES:
1. We recommend the reflow temperature 245°C(+/-5°C).The maximum soldering temperature should be limited to 260°C.
2. Don't cause stress to the epoxy resin while it is exposed to high temperature.
3. Number of reflow process shall be 2 times or less.

Recommended Soldering Pattern
(Units : mm; Tolerance: ± 0.1)

Pad design for improved heat dissipation

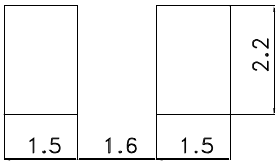

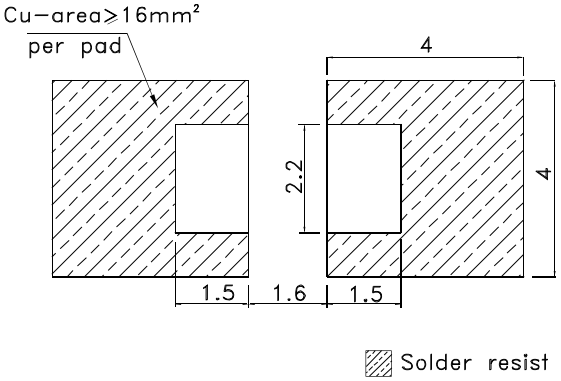

Tape Specifications
(Units : mm)

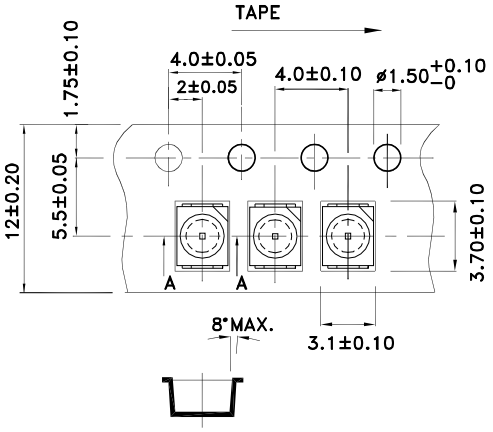

Reel Dimension

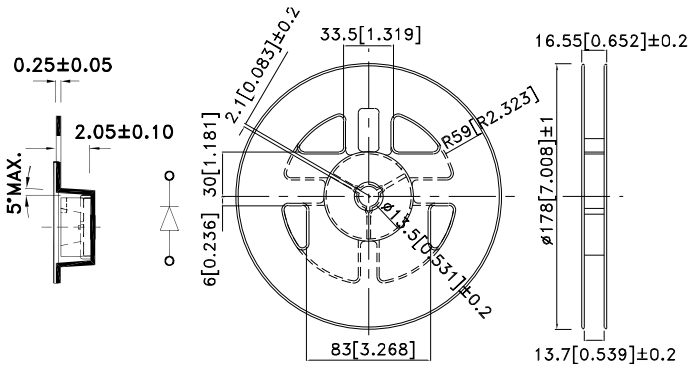

PACKING & LABEL SPECIFICATIONS **AA3528VRBXS/A-SC-AMT**

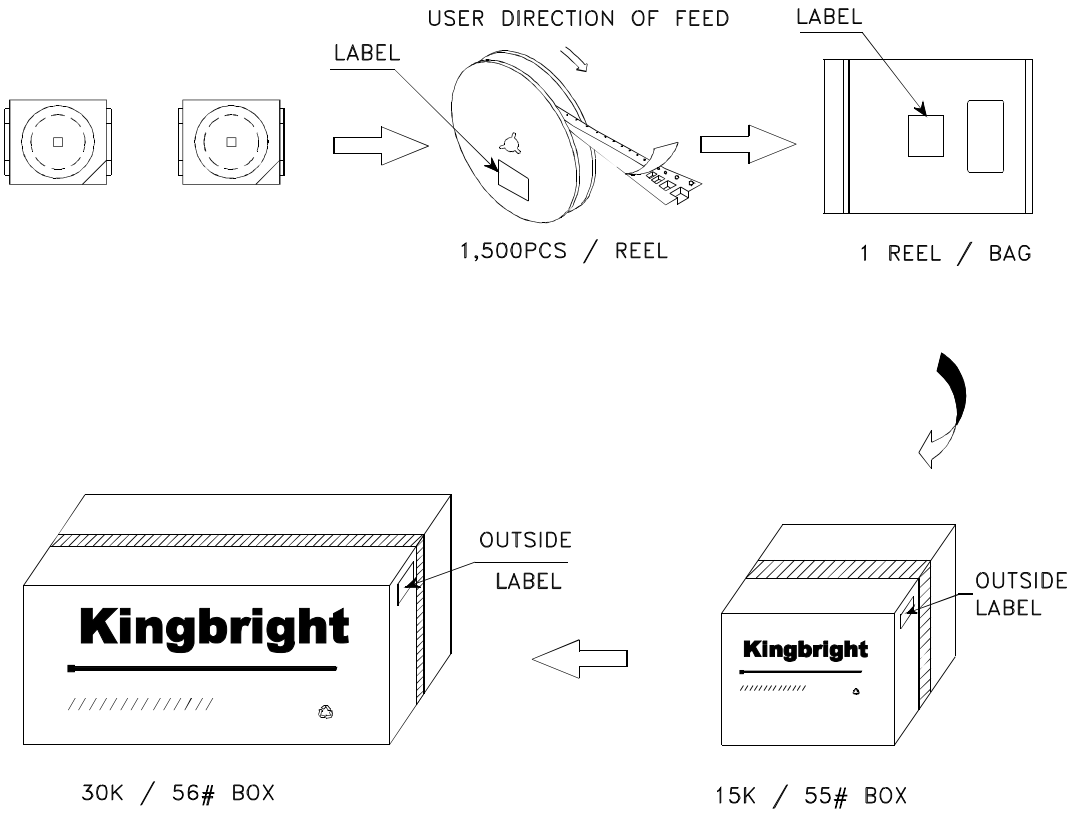

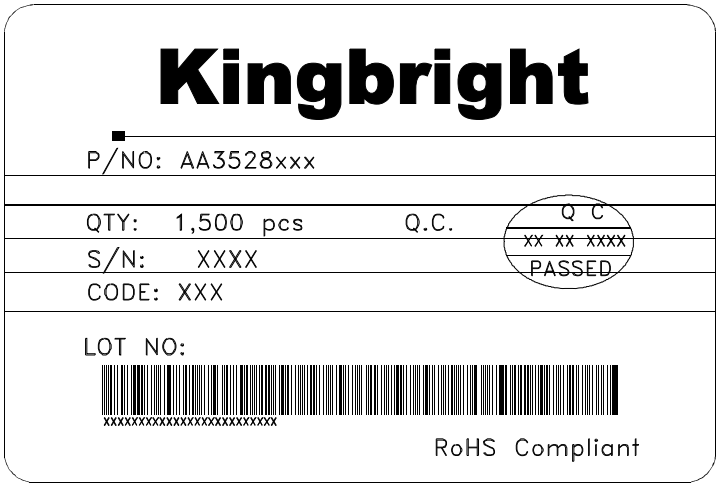

Reliability Test Items And Conditions

The reliability of products shall be satisfied with items listed below

Lot Tolerance Percent Defective (LTPD) : 10%

No.	Test Item	Standards	Test Condition	Test Times / Cycles	Number of Damaged
1	Continuous operating test	-	Ta =25°C ,IF = maximum rated current*	1,000 h	0 / 22
2	High Temp. operating test	EIAJ ED-4701/100(101)	Ta = 100°C IF = maximum rated current*	1,000 h	0 / 22
3	Low Temp. operating test	-	Ta = -40°C, IF = maximum rated current*	1,000 h	0 / 22
4	High temp. storage test	EIAJ ED-4701/100(201)	Ta = maximum rated storage temperature	1,000 h	0 / 22
5	Low temp. storage test	EIAJ ED-4701/100(202)	Ta = -40°C	1,000 h	0 / 22
6	High temp. & humidity storage test	EIAJ ED-4701/100(103)	Ta = 60°C, RH = 90%	1,000 h	0 / 22
7	High temp. & humidity operating test	EIAJ ED-4701/100(102)	Ta = 60°C, RH = 90% IF = maximum rated current*	1,000 h	0 / 22
8	Soldering reliability test	EIAJ ED-4701/100(301)	Moisture soak : 30°C,70% RH, 72h Preheat : 150~180°C(120s max.) Soldering temp : 260°C(10s)	3 times	0 / 18
9	Thermal shock operating test	-	Ta = -40°C(15min) ~ 100°C(15min) IF = derated current at 100°C	1,000 cycles	0 / 22
10	Thermal shock test	-	Ta = -40°C(15min) ~ maximum rated storage temperature(15min)	1,000 cycles	0 / 22
11	Electric Static Discharge (ESD)	EIAJ ED-4701/100(304)	C = 100pF , R2 = 1.5KΩ V = 250V	Once each Polarity	0 / 22
12	Vibration test	-	a = 196m/s² , f = 100~2KHz , t = 48min for all xyz axes	4 times	0 / 22

＊ : Refer to forward current vs. derating curve diagram

Failure Criteria

Items	Symbols	Conditions	Failure Criteria
luminous Intensity	I_V	I_F = 20mA	Testing Min. Value <Spec.Min.Value x 0.5
Forward Voltage	V_F	I_F = 20mA	Testing Max. Value ≥Spec.Max.Value x 1.2
Reverse Current	I_R	V_R = Maximum Rated Reverse Voltage	Testing Max. Value ≥Spec.Max.Value x 2.5
High temp. storage test	-	-	Occurrence of notable decoloration, deformation and cracking