datasheet for MLS WS 50/2,5
article number: 934087100

SKS Kontakttechnik GmbH

product description:	order number: 934 087-100
description:	Safety measuring lead, at either end 4 mm diameter safety connector with onward connection capability. Nickel-plated copper beryllium contact spring. Highly flexible, double insulated stranded lead, shatter-proof grip sleeve and lead. In accordance DIN EN 61010-031 standard. Color indicator for the recognition of damage to the insulation.
typ:	MLS WS 50/2,5 schwarz/black
system:	4 mm safety system
order number:	934 087-100
color	●
other color versions:	●●●●●●●●●●●●
technical data	
measurement category	CAT II
norm	DIN EN 61010-031
pin dimensions	4 mm
type of contact:	spring loaded pin and unsprung socket
type of termination:	4 mm diameter pin
cable type:	LEH-XY
cable specification:	high flexible lead
wire stranding:	320 x 0.10
rated voltage:	AC/DC 1000 V
rated current:	32 A
contact resistance:	8 mOhm
cable length:	50 cm
conductor size:	2,5 mm²
cable material:	PVC
cable color:	black
material	
contact material:	copper beryllium
contact surface material:	nickel
housing material:	PA
environmental conditions:	
temperature range:	-15 ºC to +70 ºC

Copyright ©2010 SKS-Kontakttechnik GmbH - printed: Tue Oct 26 2010 10:40:21

inflammable class:	
housing:	94 V-2
drawing	
	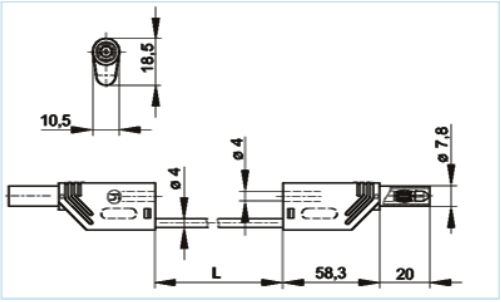

Copyright ©2010 SKS-Kontakttechnik GmbH - printed: Tue Oct 26 2010 10:40:21