MICRO SWITCH
a Honeywell Division
FED.MFG.CODE 91929

MINIATURE PRECISION LIMIT SWITCH

CATALOG LISTING
914CE31-AQ

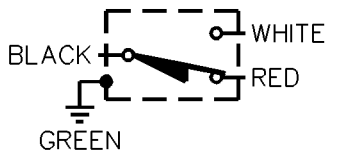

CIRCUIT DIAGRAM

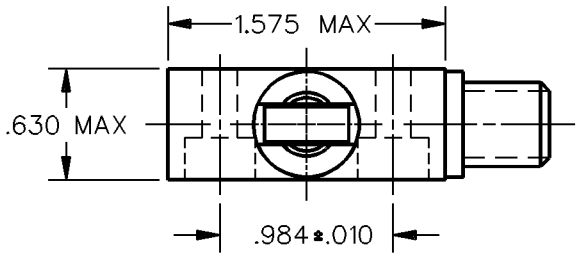

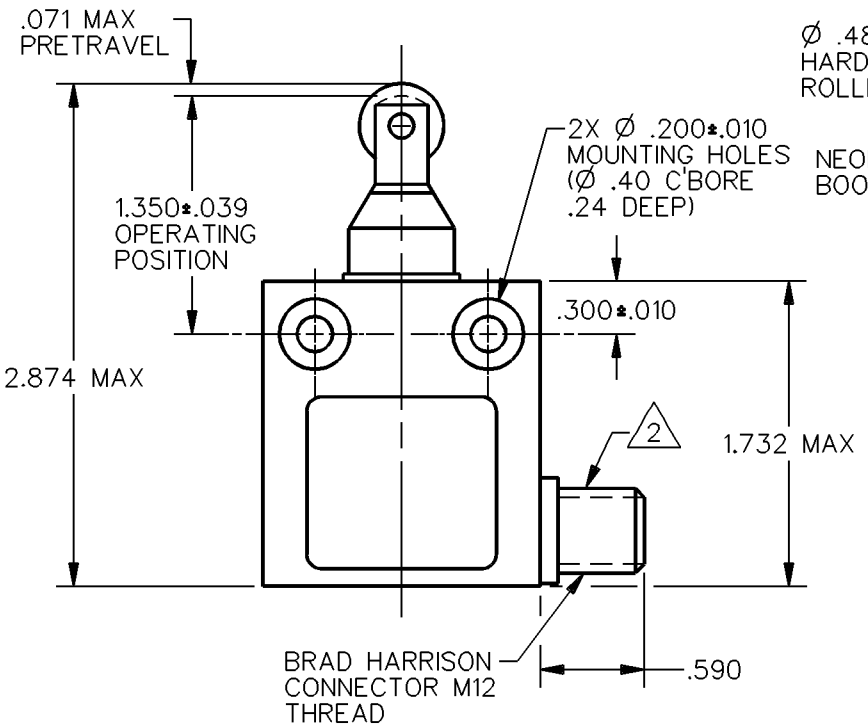

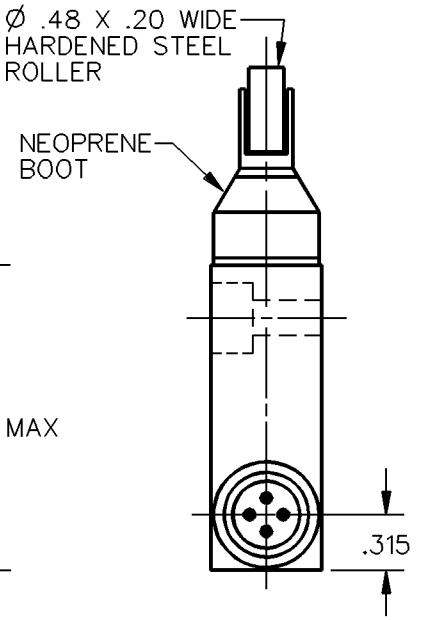

NOTES
1 – ZINC HOUSING FINISHED WITH GRAY PAINT
2 SIDE EXIT CONNECTOR

ANSI Y14.5M-1982 APPLIES

THIS DRAWING COVERS A PROPRIETARY ITEM AND IS THE PROPERTY OF MICRO SWITCH, A DIVISION OF HONEYWELL. THIS DRAWING IS NOT TO BE COPIED OR USED WITHOUT THE APPROVAL OF MICRO SWITCH.

THIRD ANGLE PROJECTION

CHARACTERISTICS	ELECTRICAL DATA	SCALE FULL / DO NOT SCALE PRINT
OPERATING FORCE — — — 5 LB MAX	CONTACT ARRANGEMENT S P D T	UNLESS OTHERWISE SPECIFIED TOLERANCES ARE
DIFFERENTIAL TRAVEL — — —.004 MAX		ONE PLACE (.0) ±.030
OVERTRAVEL — — — — — —.118 MIN	5A 1/10 HP – 125 OR 250 VAC	TWO PLACE (.00) ±.015
		THREE PLACE (.000) ±.005
		ANGLES ±
		WEIGHT

914CE31-AQ
RELEASE NO. CO-69061 REPLACES
DRAWING NUMBER
ISSUE 1
CHECK
REVISIONS
CHECK
CHECK
DRAWN S A V 10 OCT 91
DDM/CAD