DASH NO.	DESCRIPTION	MADE FROM

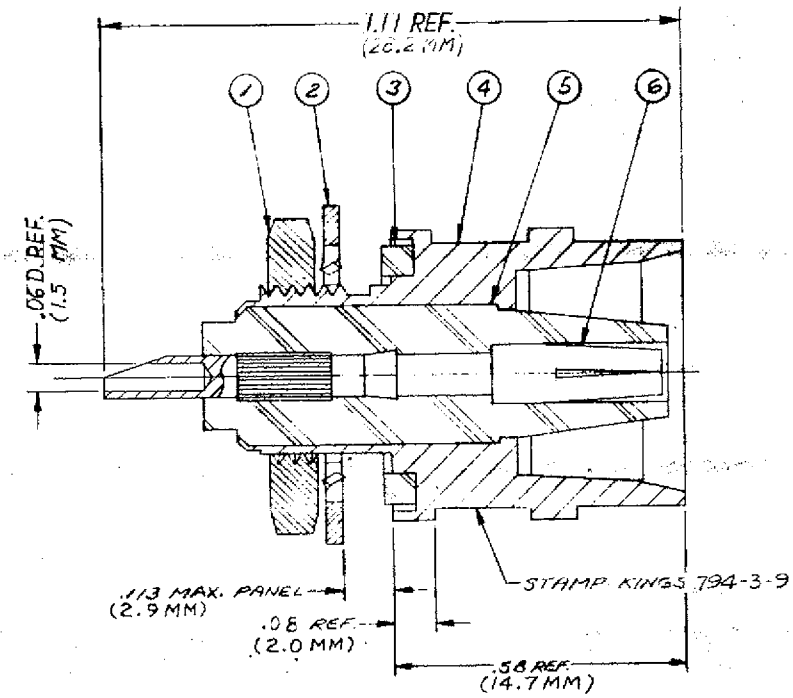

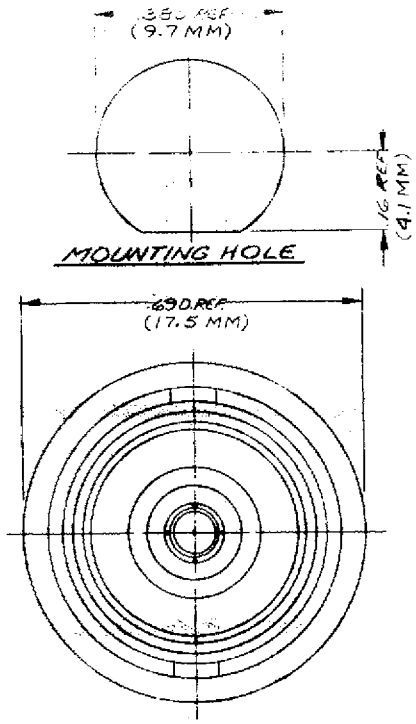

794-3-9

S-D

REVISIONS	
ISSUE	CHANGES
A	ER 30293 M.Z.B. 14 NOV 88

S-D

ITEM	REQ'D	DESCRIPTION	PART NO.
6	1	CONTACT	
5	1	INSULATOR	
4	1	BODY	E
3	1	GASKET	706-3-M99
2	1	LOCKWASHER	625B-2-M06
1	1	HEX NUT	625B-5-M06

USED ON:

REF:

FINISH

SPEC. KER 10004

MATL.

SPEC.

"C" RECEPTACLE

DRAWN KH DATE 9NOV88

APPR. MJB DATE 10NOV88

KINGS ELECTRONICS
40 MARBLEDALE ROAD
TUCKAHOE, N. Y. 10707

794-3-9

UNLESS OTHERWISE SPECIFIED:

1. TOLERANCES: FRACTIONS & 2 PLACE DECIMALS ± .010
   3 PLACE DECIMALS ± .004 ANGLES ± 0° 30'
   T. I. R. CONCENTRICITY OF ANY 2 DIAMETERS MAY NOT EXCEED HALF THE SUM OF THEIR TOLERANCES.
2. REMOVE ALL BURRS, BREAK SHARP EDGES .005 MAX.
3. NO FILLETS PERMITTED.
4. SURFACE ROUGHNESS 63 MICROINCHES RMS MAX.
5. ALL DIMENSIONS PRIOR TO PLATING.

DIETZGEN 1968M 15116

S-D