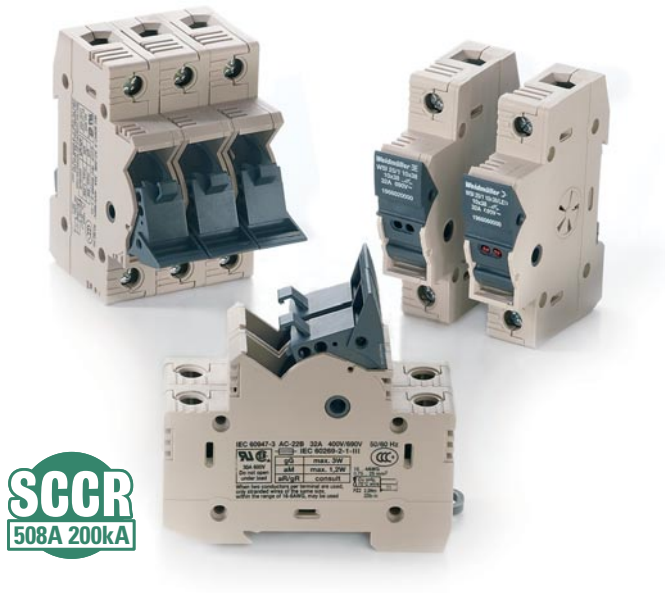

WSI 25CC

WSI 25 10x38

WSI 25CC/LED

WSI 25 10x38/LED

Weidmuller offers DIN rail mounted terminal blocks for the popular 10.3 mm x 38 mm (13/32” x 1.5”) midget fuses. Compact and touch safe, these terminals meet CSA, UL and IEC requirements.

Features:

- CSA certified for 600 Vac, 30 A max.
- UL rated 600 Vac, 30 A max.
- 1, 2, 3 pole with or without indicator
- Mounting on 35 mm DIN rail
- Only 17.8 mm wide per pole
- Lever mechanism for quick and safe fuse replacement
- Vented housing to reduce internal heating and extend fuse life
- 3 W power dissipation maximum
- Two versions are available:
  - WSI 25 10x38 accepts all types of 13/32" x 1.5" midget fuses including CC type.
  - WSI 25CC ONLY accepts CC type fuses which have a typical interrupting capacity of 200kA and in compliance to UL508A standard.
- Both version are available with or without LED

WSI 4, 5 x 20 mm

WSI 4/2, 1 1/4" x 1/4"

Fuse terminal 5 x 20 mm and 1 1/4" x 1/4" with screw connection technology (clamping yoke)

The new WSI 4 and 4/2 fuse terminal series offers you a compact solution for implementing short-circuit and overload protection utilizing 5 x 20 mm and 1 1/4" x 1/4" fuses.

Features:

- Standard screw clamp technology to accommodate maximum 10 AWG conductors
- Blown fuse indication by means of LED voltage ranges (10 - 250 V)
- Combi-foot for mounting on TS 32 and TS 35 DIN-rails (WSI 4/2 only)
- Special interlocking of levers for multiple phase disconnection
- Large marking area to accommodate standard WS and DEK markers

	WSI 25 10x38 — 25 mm²	WSI 25 CC — 25 mm²
	For fuses 10x38	For fuses CC
width x length x height with TS 35 x 7.5 mm	17.8 x 58 x 81	17.8 x 58 x 81
max. current / max. cond. cross-section A/mm²	32 / 25	32 / 25
max. clamping range mm²	1.5 ... 25	1.5 ... 25

Technical data

Rated data		IEC 60947-7-3				IEC 60947-7-3			
		IEC	UL	CSA	EN 60079-7	IEC	UL	CSA	EN 60079-7
Rated voltage, adjacent terminal	V	690	600	600		690	600	600	
Rated current	A	32	30	30		32	30	30	
Rated cross-section	mm²	25	AWG 18 ... 4	AWG 18 ... 4		25	AWG 18 ... 4	AWG 18 ... 4	
Rated isolation voltage	V	800				800			
Power loss 1 pole / 2 pole / 3 pole		0.3 / 0.6 / 0.9				0.3 / 0.6 / 0.9			
UL94 Flammability class		V-0				V-0			
Approvals									
Allowable power dissipation for standard version fuse		3W							
Allowable power dissipation for semi-conductor protection version fuse		4.3W (10mm², 25A)							
Interrupting Capacity						200kA			
Clamped conductors (H05V/H07V)		**Rated connection**				**Rated connection**			
Solid / stranded	mm²	1.5 ... 16 / 1.5 ... 16				1.5 ... 16 / 1.5 ... 16			
Flexible / Flexible with wire end ferrule	mm²	0.75 … 25 / 0.75 … 25				0.75 … 25 / 0.75 … 25			
Tightening torque range (clamping screw)	Nm	2.0 ... 2.4				2.0 ... 2.4			
Stripping length	mm	11				11			

Ordering data

Version	Type	Qty.	Part No.	Type	Qty.	Part No.
1 pole without LED	WSI 25/1 10x38	12	**1966020000**	WSI 25/1 CC	12	**1966050000**
2 pole without LED	WSI 25/2 10x38	6	**1966090000**	WSI 25/2 CC	6	**1966040000**
3 pole without LED	WSI 25/3 10x38	4	**1966080000**	WSI 25/3 CC	4	**1966030000**
1 pole with LED	WSI 25/1 10x38/LED	12	**1966060000**	WSI 25/1 CC/LED	12	**1966070000**
2 pole with LED	WSI 25/2 10x38/LED	6	**7940029427**	WSI 25/2 CC/LED	6	**7940029425**
3 pole with LED	WSI 25/3 10x38/LED	4	**7940029428**	WSI 25/3 CC/LED	4	**7940029426**
Note	LED: 110-600Vac/dc, 2mA leakage			LED: 110-600Vac/dc, 2mA leakage		

Accessories

	Type	Qty.	Part No.	Type	Qty.	Part No.
Marking Systems	ESG 6/15 K MC WHITE	200	**1880100000**	ESG 6/15 K MC WHITE	200	**1880100000**
2 pole ganging kit	SET 2 POLE WSI 25	10	**1044440000**	SET 2 POLE WSI 25	10	**1044440000**
3 pole ganging kit	SET 3 POLE WSI 25	10	**1044450000**	SET 3 POLE WSI 25	10	**1044450000**
Single phase bus bar (insulated)	WQB 18MM/90 1METER	1	**1044460000**	WQB 18MM/90 1METER	1	**1044460000**

Dimensions

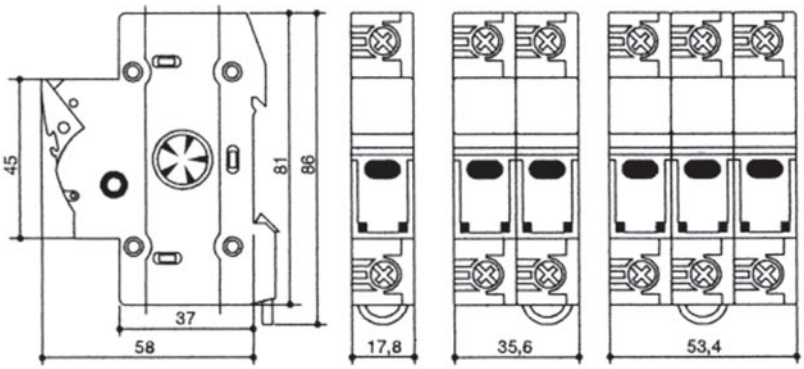

		WSI 4	4 mm²	WSI 4/2	4 mm²
		Fuse terminal 5 x 20 mm		Fuse terminal 1 1/4" x 1/4"	
				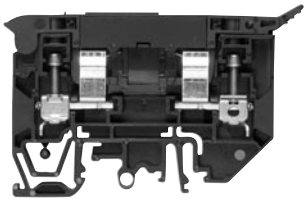	
Width/Length/Height with TS35x7.5	mm	**8 x 50.7 x 39.4**		**9.1 x 81.6 x 54**	
Width/Length/Height with TS32x15	mm			**9.1 x 81.6 x 58.5**	
Max. current / max. cond. cross-section	A/mm²	**15 / 4**		**15 / 6**	
Max. clamping range	mm²	**0.05 ... 4**		**0.05 ... 6**	

Technical data

		IEC 60947-7-3 / VDE 0100-537				IEC 60947-7-3 / VDE 0100-537			
Rated data		**IEC**	**UL**	**CSA**	**EN 60079-7**	**IEC**	**UL**	**CSA**	**EN 50019**
Rated voltage / to adjoining terminal	V	500	300	300		500	300	300	
Rated current / to adjoining terminal	A	12	15	15		15	15	15	
Rated cross-section	mm²	4	AWG 22…12	AWG 22…12		4	AWG 30…10	AWG 30…10	
Rated impulse voltage / Pollution severity	kV/-	6 / 3				6 / 3			
Plug gauge IEC 60-947-1 / flammability class acc. UL94		A3 / V-0				A3 / V-0			
Approvals									
Clampable conductors (H05V/H07V)		**Rated connection**				**Rated connection**			
Solid / stranded	mm²	0.5…4 / 0.5…4				0.2…6			
Flexible / flexible w. wire end ferrule	mm²	0.5…4 / 0.5…4				0.2…4			
Tightening torque range (clamping screw)	Nm	0.5…0.6 (M 3)				0.5…0.6 (M 3)			
Stripping length / blade size	mm / -	8 / 0.6 x 3.5				10 / 0.6 x 3.5			
2 clampable conductors of equal cross-section									
Solid / stranded	mm²	0.5…1.5				0.34…2.5			
Flexible / flexible w. wire end ferrule	mm²	0.5…1.5 / 0.5…1.5				0.34…2.5 / 0.34…1.5			

Ordering Data

Version		Type	Part No.	Type	Part No.
black Wemid	without LED	WSI 4	**1886580000**	WSI 4/2	**1880430000**
	10 - 36 V	WSI 4/LD 10 - 36 V AC/DC	**1886590000**	WSI 4/2/LD 10 - 36 V AC/DC	**1880410000**
	30 - 70 V	WSI 4/LD 30 - 70 V AC/DC	**1886560000**	WSI 4/2/LD 30 - 70 V AC/DC	**1880440000**
	60 - 150 V	WSI 4/LD 60 - 150 V AC/DC	**1886570000**	WSI 4/2/LD 60 - 150 V AC/DC	**1880420000**
	140 - 250 V	WSI 4/LD 140 - 250 V AC/DC	**1886550000**	WSI 4/2/LD 140 - 250 V AC/DC	**1880390000**

Accessories

Fuse cartridges 1 1/4" x 1/4" without indicator		**Type**	**Current [A]**	**Part No.**	**Type**	**Current [A]**	**Part No.**
33 kA breaking capacity	E 0.5 A				GZ 0.5A/F	0.5	**0533800000**
(F) = fast	E 1 A				GZ 1.0A/F	1	**0525500000**
	E 2 A				GZ 2.0A	2	**0294500000**
Nominal voltage (V)	E 3 A				GZ 3.0A	3	**0295700000**
440 V	E 5 A				GZ 5.0A	5	**0294600000**
	E 7 A				GZ 7.0A	7	**0295800000**
	E 10 A				GZ 10.0A	10	**0293900000**
	E 12.5 A				GZ 12.5A/FF	12.5	**0245400000**
					Dummy fuse	15	**1582770000**
Fuse cartridges 5 x 20 mm (IEC 60127-2)		**Type**	**Current [A]**	**Part No.**	**Type**	**Current [A]**	**Part No.**
Rated voltage 250 V	0.25 A quick-blow	G 20/0.25A/F		**0430500000**			
Rated breakage capacity 1500 A	0.5 A quick-blow	G 20/0.5A/F		**0430600000**			
(at 250V / 50Hz / cos j = 0.7)	1 A quick-blow	G 20/1A/F		**0430700000**			
	2 A quick-blow	G 20/2A/F		**0430900000**			
External jumper comb		**Type**	**Current [A]**	**Part No.**	**Type**	**Current [A]**	**Part No.**
	Insulated	QB/WSI 4, 2-pole (8 mm)	15	**0461100000**	QB/WSI 4/2, 10-pole (9 mm)	30	**67603346**
		QB/WSI 4, 3-pole (8 mm)	15	**0461200000**			
		QB/WSI 4, 4-pole (8 mm)	15	**0461300000**			
End plate / partition						**Width [mm]**	
	black Wemid	Not Required			WAP WSI 4/2	2.5	**1880450000**
End bracket							
	dark beige	EW35		**0383560000** (TS 35)	EW35		**0383560000** (TS 35)
					EWK 1		**0206160000** (TS32)
Screwdriver							
	Standard version	SD 0.6X3.5X100		**9008330000**	SD 0.6X3.5X100		**9008330000**
Marking systems							
	Tags	WS 12/6.5 MC		**1609920000**	WS 12/6.5 MC		**1609920000**
		DEK 5/6 MC		**1609820000**	DEK 5/6 MC		**1609820000**