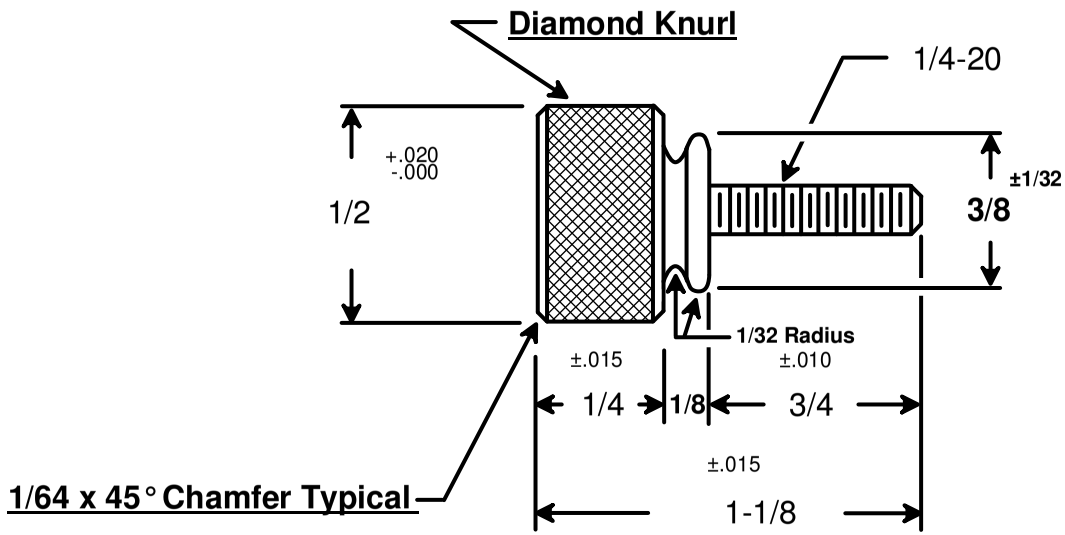

RAF ELECTRONIC HARDWARE
95 SILVERMINE RD. SEYMOUR, CT. 06483
TEL: { 203 } 888-2133
FAX: { 203 } 888-9860
WEB: http://www.rafhdwe.com
a Division of **MW Industries**, Inc.

DRAWING NOT TO SCALE

RoHS COMPLIANT

DRAWN BY : GARY HUPPRICH	DATE 09/24/09	TOLERANCES { EXCEPT AS NOTED }	TITLE
CHECKED BY :	DATE	FRACTION ±.005	WASHER FACE THUMB SCREW
MATERIAL STAINLESS STEEL		DECIMAL ±.005	PART NO.
FINISH			7115-SS