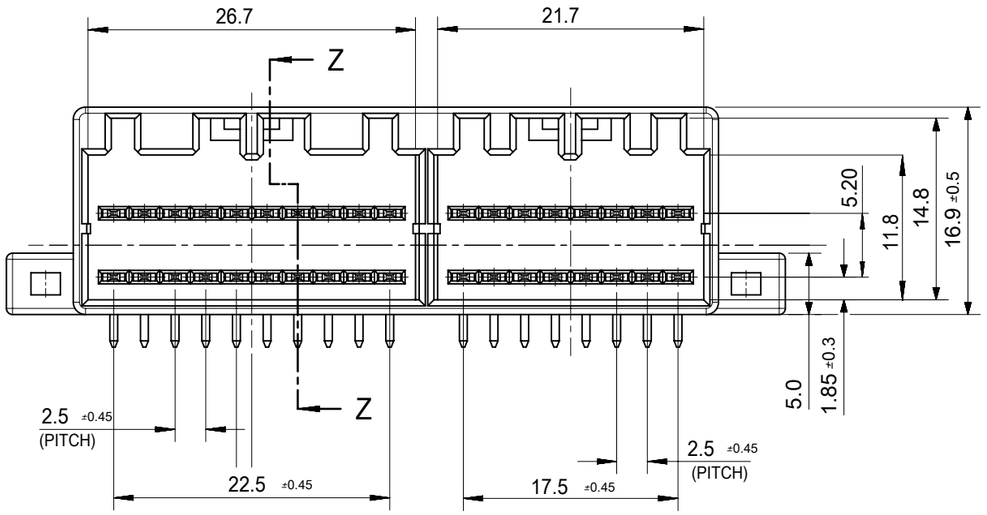

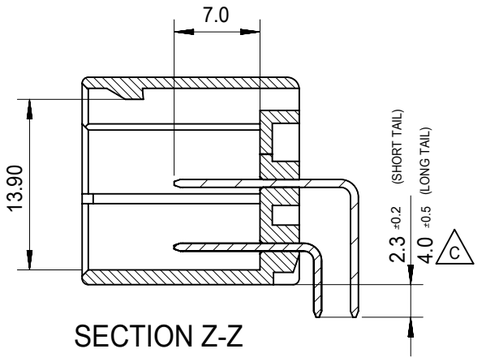

SECTION Z-Z

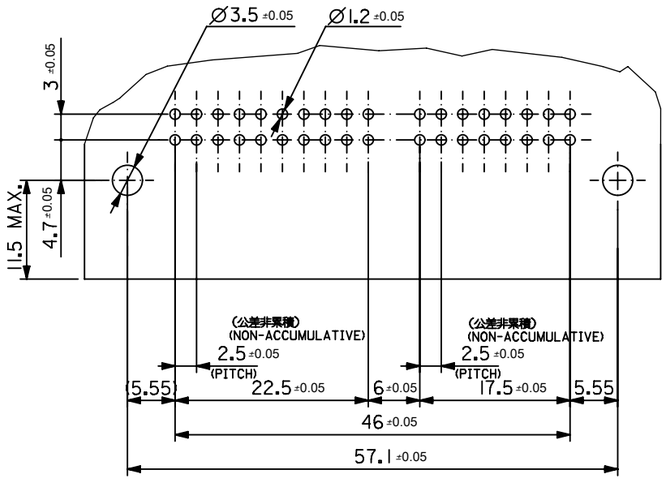

RECOMMENDED P.C.B. HOLE DIM. (MOUNT SIDE)

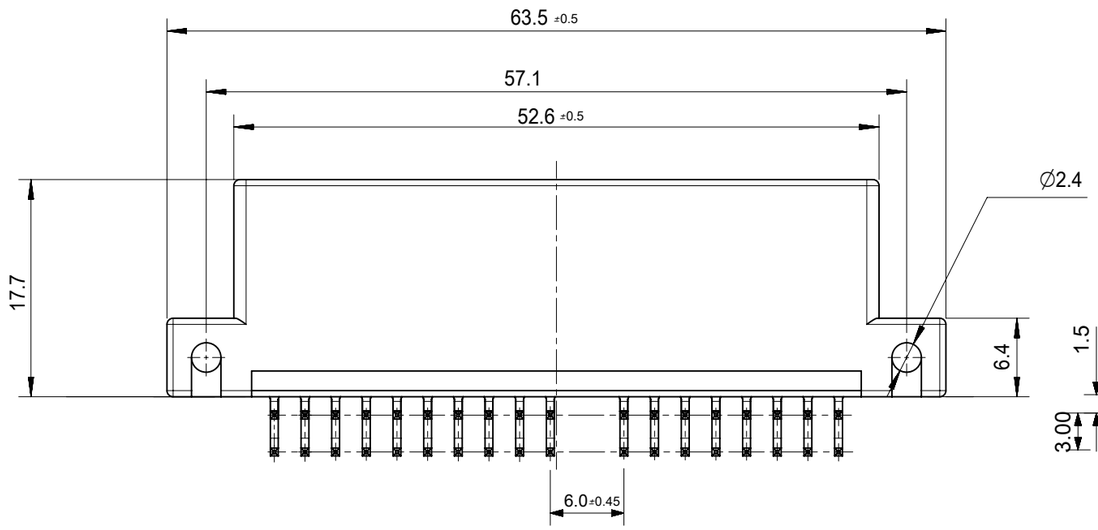

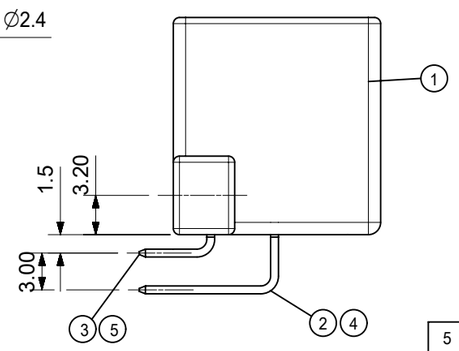

C		
	681453635	68145-3635
	681453625	68145-3625
	MATERIAL NO.	ORDER NO.

NO.	DECRIPTION	P/NUMBER	MATERIAL	COLOR	Q'TY	
5	040 TERMINAL S (LONG TAIL)	104588-9103	C2680 (648971096)	-	-	18
4	040 TERMINAL L (LONG TAIL)	104588-9003	C2680 (648971095)	-	-	18
3	040 TERMINAL S (SHORT TAIL)	104588-9203	C2680 (648971096)	-	18	-
2	040 TERMINAL L (SHORT TAIL)	104588-9303	C2680 (648971095)	-	18	-
1	040 HEADER 36P	68145-3685	PBT-GF30 (899922201)	GRAY	1	1

NOTES

1. APPLICABLE PCB THICKNESS : 1.6mm
2. RECOMMENDED MOUNTING SCREW : 3.0mm Dia, 6.0mm Length (Min)
   TAPPING SCREW SPECIFIED IN JIS B1115, B1122
   (TIGHTENING TORQUE : 4.0Kgf MAX.)
3. MATING CONNECTOR : 35564-2015, 35563-1615

SYMBOLS: E5 = 0; E4 = 0; E3 = 0; S = 0; ▼ = 0; C = 0; ☒ = 0; ■ = 0; ▽ = 0

THIS DRAWING CONTAINS INFORMATION THAT IS PROPRIETARY TO MOLEX ELECTRONIC TECHNOLOGIES, LLC AND SHOULD NOT BE USED WITHOUT WRITTEN PERMISSION

DIMENSION UNITS: mm — SCALE: 1:1

GENERAL TOLERANCES (UNLESS SPECIFIED)

ANGULAR TOL	±	°
4 PLACES	±	
3 PLACES	±	
2 PLACES	±	0.2
1 PLACE	±	0.3
0 PLACES	±	

DRAFT WHERE APPLICABLE MUST REMAIN WITHIN DIMENSIONS

CURRENT REV DESC:

EC NO: 602957
DRWN: JWKIM02 2018/08/16
CHK'D: JHJANG 2018/08/20
APPR: JHJANG 2018/08/20

INITIAL REVISION:
DRWN: JWKIM02 2018/07/30
APPR: JHJANG 2018/08/20

THIRD ANGLE PROJECTION | DRAWING: A3-SIZE | SERIES: 68145

molex

040 HEADER ASSY 36P

PRODUCT CUSTOMER DRAWING

DOCUMENT NUMBER	DOC TYPE	DOC PART	REVISION
681453635	PSD	000	C

MATERIAL NUMBER	CUSTOMER	SHEET NUMBER
681453635	GENERAL	1 OF 1

DOCUMENT STATUS	P1	RELEASE DATE	2018/08/20 02:18:10

FORMAT: master Sheet-A3
REVISION: H
DATE: 2018/01/16