MIL-C-38999
Series IV
Universal
Polarization

650HS007 M 19

Basic Part No.

Finish (Table II)

Shell Size

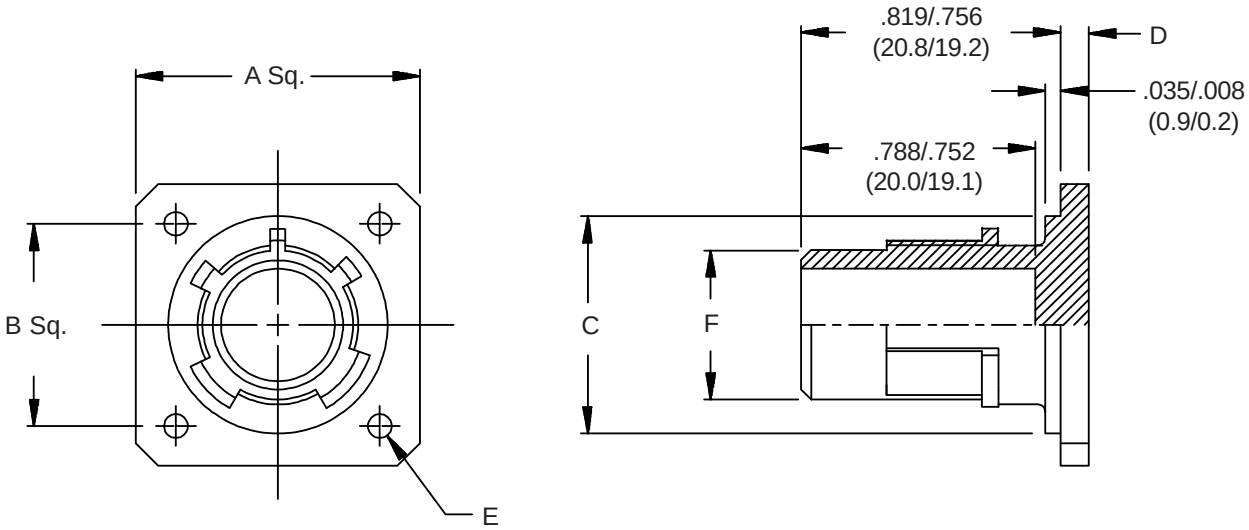

See inside back cover fold-out or page 14 for Table II.

TABLE III: DIMENSIONS

Shell Size	Shell Size Code	A Max		B BSC		C + 0 -.015	(0.0) (-0.4)	D ±.006	(±0.2)	E ±.006	(±0.2)	F + 0 -.006	(0.0) (-0.2)
11	B	1.051	(26.7)	.812	(20.6)	.793	(20.1)	.094	(2.4)	.132	(3.4)	.509	(12.9)
13	C	1.146	(29.1)	.906	(23.0)	.919	(23.3)	.094	(2.4)	.132	(3.4)	.634	(16.1)
15	D	1.240	(31.5)	.969	(24.6)	1.044	(26.5)	.094	(2.4)	.132	(3.4)	.759	(19.3)
17	E	1.335	(33.9)	1.062	(27.0)	1.170	(29.7)	.094	(2.4)	.132	(3.4)	.885	(22.5)
19	F	1.461	(37.1)	1.156	(29.4)	1.294	(32.9)	.094	(2.4)	.132	(3.4)	1.009	(25.6)
21	G	1.583	(40.2)	1.250	(31.8)	1.419	(36.0)	.126	(3.2)	.132	(3.4)	1.134	(28.8)
23	H	1.709	(43.4)	1.375	(34.9)	1.544	(39.2)	.126	(3.2)	.152	(3.9)	1.259	(32.0)
25	J	1.835	(46.6)	1.500	(38.1)	1.669	(42.4)	.126	(3.2)	.152	(3.9)	1.384	(35.2)

1. Equivalent to DOD-C-38999/50.
2. Metric dimensions (mm) are indicated in parentheses.

© 2005 Glenair, Inc. CAGE Code 06324 Printed in U.S.A.