MICRO SWITCH
FREEPORT ILLINOIS, U.S.A.
A DIVISION OF HONEYWELL
FED. MFG. CODE 91929

SWITCH-ENCLOSED

CATALOG LISTING
602EN532

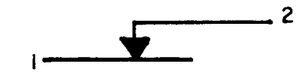

CIRCUIT DIAGRAM

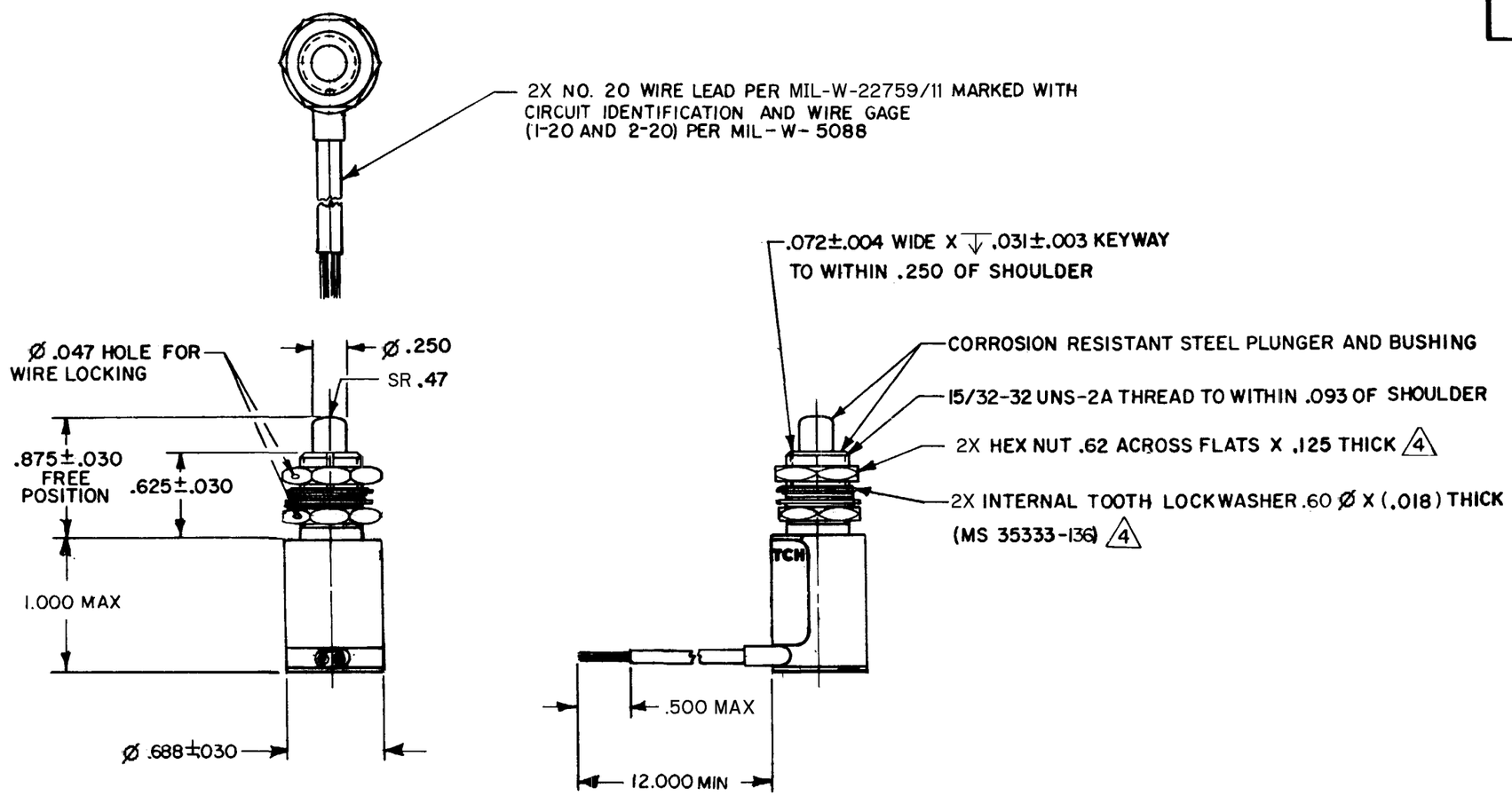

NOTES
1 - CORROSION RESISTANT STEEL ENCLOSURE
2 - SWITCH SEALED PER MIL-PRF-8805 SYMBOL 4
3 - CIRCUIT DIAGRAM, DATE CODE, FED. MFG. CODE AND CATALOG LISTING ARE SHOWN ON NAMEPLATE
4 - HARDWARE MAY BE PACKAGED UNASSEMBLED PER MIL-PRF-8805

602 EN532
PAGE 1 OF 1
M
DRAWING NUMBER
ISSUE 10
REPLACES
RELEASE NO. PR-7995
CHECK
CHECK
CHECK
CHECK
24 JULY 79
13 JUL 79
GJW

REVISIONS

A	PR 7995	G J W 19 JUL 79
B	C047573	J A P 7 AUG 80
C	C O 49037	J M J 10 FEB 81
D	C049806	D J W 24 SEPT 81
E	C057370	T S K 15 MAY 85
F	C O 756128	WES 16 AUG 93
G	C094274	DLM 17 MAR 99
H	204911	G R T 19 FEB 02

RASTER
FO-52851-A
DRAWN

THIS DRAWING COVERS A PROPRIETARY ITEM AND IS THE PROPERTY OF MICRO SWITCH, A DIVISION OF HONEYWELL. THIS DRAWING IS NOT TO BE COPIED OR USED WITHOUT THE APPROVAL OF MICRO SWITCH.

THIRD ANGLE PROJECTION

SCALE FULL
DO NOT SCALE PRINT

CHARACTERISTICS

OPERATING FORCE — 3-6 LB
FULL OVERTRAVEL FORCE — 17 LB MAX
RELEASE FORCE — 2 LB MIN
PRETRAVEL — .040 MAX
DIFFERENTIAL TRAVEL — .020 MAX
OVERTRAVEL — .125 MIN

ELECTRICAL DATA

CONTACT ARRANGEMENT
S P N C

LOAD	28 VDC SEA LEVEL	28 VDC 50,000 FT.
RES	7	7
IND	4	4
MOTOR	4	
LAMP		

TOLERANCES

APPLY TO DESIGN UNITS. CONVERSIONS ARE ONLY FOR REFERENCE. UNLESS NOTED, TOLERANCES ARE ±

	DIM. mm	TOL. mm/in	DIM. in	TOL. mm/in
NO PLACES	X	1/.04		
ONE PLACE	X,X	0.4/.016	X.X	0.8/.03
TWO PLACES	X,XX	0.15/.006	X.XX	0.38/.015
THREE PLACES			X.XXX	0.13/.005
ANGLES				

DESIGN UNITS: SI METRIC ☐ US CUSTOMARY ■

RAW MATERIAL-COMMERCIAL STANDARD
MICRO SWITCH STANDARDS APPLY
DIMENSIONS ARE TO BE MET BEFORE PROTECTIVE COATINGS ARE APPLIED

WEIGHT 2.5 OZ. MAX.

ANSI Y14.5M-1982 APPLIES