THIS DRAWING IS UNPUBLISHED. RELEASED FOR PUBLICATION -,- .
© COPYRIGHT – BY TYCO ELECTRONICS CORPORATION. ALL RIGHTS RESERVED.

LOC	DIST
GP	00

REVISIONS

P	LTR	DESCRIPTION	DATE	DWN	APVD
	0	RELEASED PER EC 0S13-0288-05	17OCT05	BM	WM

1. MATERIAL: METRIC MOUNTING STUD – BLACK OXIDE COATED CARBON STEEL.
   WASHER, LOCKWASHER AND HEX NUT – ZINC PLATED STEEL.
2. ALL HARDWARE SHIPPED UNASSEMBLED.

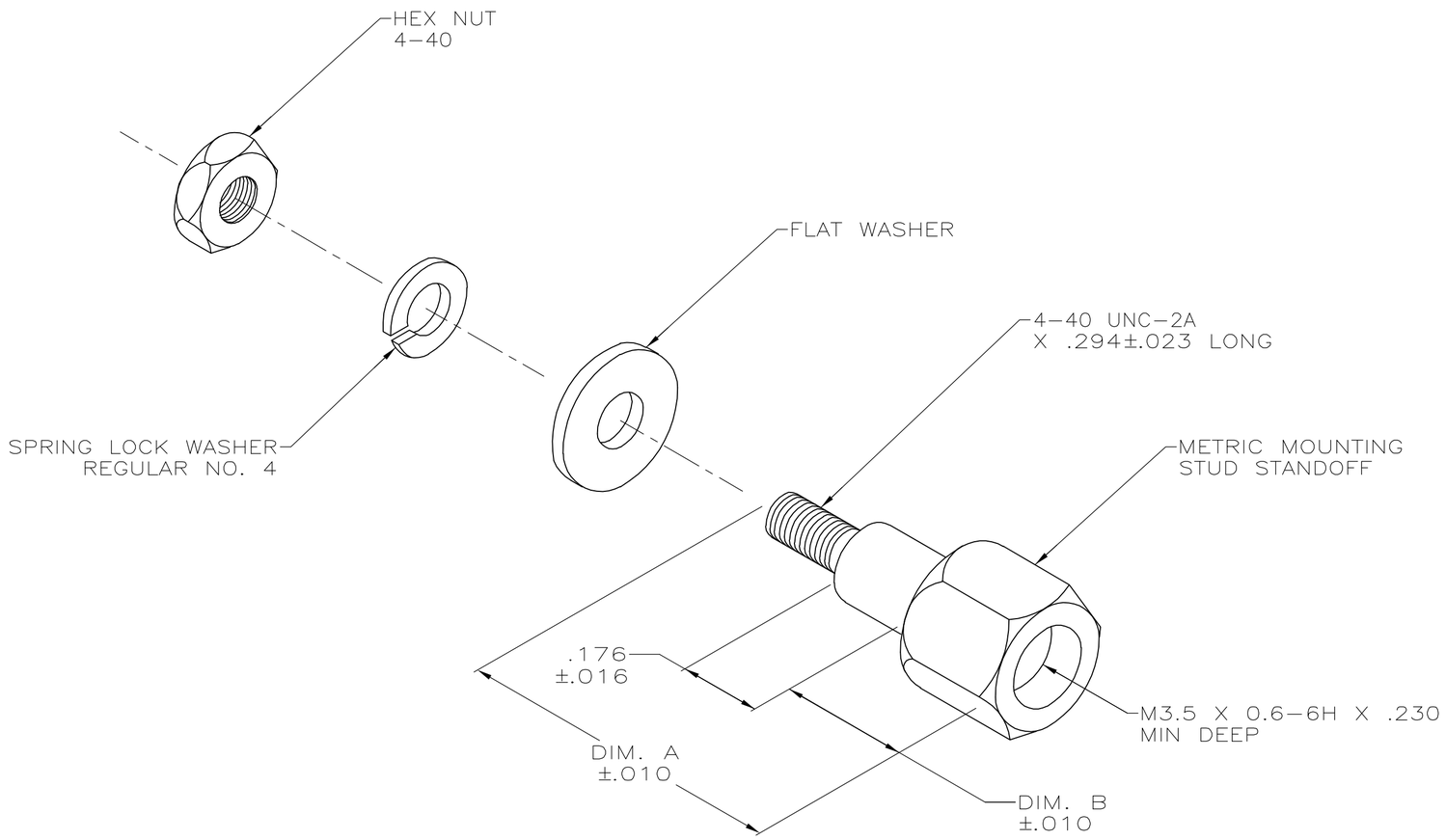

DIM. B	DIM. A	PART NUMBER
.193	.688	5553636–3
.256	.750	5553636–2

THIS DRAWING IS A CONTROLLED DOCUMENT.

DIMENSIONS: INCHES

TOLERANCES UNLESS OTHERWISE SPECIFIED:
0 PLC ± –
1 PLC ± –
2 PLC ± –
3 PLC ± –
4 PLC ± –
ANGLES ± –

MATERIAL 1

FINISH 1

DWN B. MCMASTER 17OCT05
CHK W. MILLHIMES 17OCT05
APVD W. MILLHIMES 17OCT05
PRODUCT SPEC —
APPLICATION SPEC —
WEIGHT —

tyco Electronics
Tyco Electronics Corporation
Harrisburg, PA 17105–3608

NAME
HARDWARE KIT,
SHIELDED, CHAMP LATCH

SIZE	CAGE CODE	DRAWING NO	RESTRICTED TO
A2	00779	C–5553636	—

CUSTOMER DRAWING | SCALE 4:1 | SHEET 1 OF 1 | REV 0

5553636

AMP 1471–9 REV 31MAR2000